URGENT

MWO effective date 1 February 1994 and completion date 31 December 1994
MWO 5-2330-360-23-1
MODIFICATION WORK ORDER

INSTRUCTIONS FOR BRAKE (BENDIX) MODIFICATION OF SEMITRAILER, LOWBED; 40-TON CONSTRUCTION EQUIPMENT TRANSPORTER M870 (CCE) (CMI/LOAD KING MODEL 403LF) (NSN 2330-00-133-1731) AND SEMITRAILER, LOWBED: 40-TON CONSTRUCTION EQUIPMENT TRANSPORTER M870A1 (NSN 2330-01-224-9245)

HEADQUARTERS, DEPARTMENT OF THE ARMY, WASHINGTON, D.C.
1 Februaryl994

1. PURPOSE. The purpose of this MWO is to provide kit data, parts information and modification instructions for brake (bendix) modification of Semitrailer, Lowbed: 40-Ton Construction Equipment Transporter M870 (CCE) (CMI/Load King Model 403LF), (NSN 2330-00-133-1731) and Semitrailer, Lowbed: 40-Ton Construction Equipment Transporter M870A1, (NSN 2330-01-224-9245)

2. PRIORITY. This modification is classified as URGENT.

3. END ITEM TO BE MODIFIED.

SEMITRAILER, Lowbed: 40-Ton Construction Equipment Transporter, M870 (NSN 2330-00-133-1731), LIN S70594. (The M870 modification is covered in paragraph 10, part one.)
SEMITRAILER, Lowbed: 40-Ton Construction Equipment Transporter, M870A1, (NSN 2330-01-224-9245), LIN S70594. (The M870A1 modification is covered in paragraph 10, part two.)

4. MODULES TO BE MODIFIED None.

5. PARTS TO BE MODIFIED.

The two trailer models brake systems will be modified to include a new (third) rear air reservoir tank, new relay valves, together with some new associated air lines and fittings, and replacement of existing slack adjusters with new automatic slack adjusters.

6. APPLICATION.

a. Time Compliance Schedule. 1 February 1994 through 31 December 1994.
b. Level of Maintenance. Unit and Direct Support maintenance levels.
c. Work Force Skills. Unit and Direct Support general chassis mechanic.

6. APPLICATION (Continued).

d. Time Required (man-hours)	M870 Basic	M870A1
(a) Wheel removal and installation	1.0	1.0
(b) Deck board removal and installation	0.5	N/A
(c) Air reservoir mounting bracket installation	0.8	0.8
(d) Air reservoir assembly and installation	0.5	0.5
(e) Valve replacement and new airline installation	1.9	1.9
(f) Slack Adjuster replacement	2.5	2.5
(g) Testing and marking	0.4	0.4
Total	7.6	7.1

7. TECHNICAL PUBLICATIONS AFFECTED/CHANGED.

8.

Technical Publication	Date
TM 5-2330-360-14&P, Operator, Organizational, Direct Support and General Support, and Repair Parts and Special Tools List, M870	6 December 1984
TM 5-2330-378-14&P, Operator, Organizational, Direct Support and General Support, and Repair Parts and Special Tools List, M870A1	18 May 1988

8. MWO PARTS LIST.

a Kit, Modification, SEMITRAILER, Lowbed: 40-Ton Construction Equipment Transporter, M870: PN 57K3318 (19207), NSN 2530-01-381-2845; and SEMITRAILER, ,Lowbed: 40-Ton Construction Equipment Transporter M870A1, PN 57K3296 (19207), NSN 2530-01-381-2844. Parts list for this conversion kit is as follows:

M870 MATERIALS LIST

PART NO.	(CAGEC)	NSN	QNTY EACH TRAILER	NOMENCLATURE
101622	(06853)	2530-01-252-6121	1	Spring brake valve, (SR-4)
103385	(06853)	4820-00-142-3036	1	Drain cock
104561	(06853)		1	Relay valve (R-12)
106345	(06853)		1	Relay emergency valve (RE-6)
109165	(06853)		2	Hose, 3/8" PT x 25" with swivel and adapter 3/8" PT (-65 degrees Farenheight Temperature
109379	(06853)		1	Air Reservoir Tank
112472	(06853)		2	Air reservoir tank mounting bracket
112479	(06853)		1	Spring brake valve mounting bracket
112518	(06853)		1	Tube, 1/2" x 23"
112520	(06853)		1	Cross fitting
112521	(06853)		1	Elbow, 1/4" PT x 3/8" HYD hose (Stainless Steel)
112553	(06853)		2.	Adapter, 3/8" PT x 3/8" HYD hose (Stain less Steel)
201946	(06853)	5310-00-013-8572	1	Washer, lock
202983	(06853)	5310-00-209-0933	8	Washer, lock, 3/8"
204235	(06853)	5310-01-055-8817	8	Washer, flat, 3/8"
205102	(06853)		1	Elbow, 1/4" PT x 3/8" Tube
205103	(06853)	4730-00-288-9490	1	Tee, 1/4" PT x 3/8" Tube
205104	(06853)	4730-00-391-3809	1	Tee, 1/4" PT x 3/8" Tube (Pipe on Run)
212862	(06853)		1	Reducing bushing 3/8" PT x 1/4" PT
217690	(06853)	4730-00-526-0284	1	Adapter, 1/4" PT x 1/2" Tube

8. MWO PARTS LIST (Continued)

M870 MATERIALS LIST (Continued)

PART NO.	(CAGEC)	NSN	QNTY EACH TRAILER	NOMENCLATURE
220475	(06853)	4730-00-409-7854	1	Elbow, 1/4" PT x 1/2" Tube
220722	(06853)		2	Elbow, 45 degree, 1/4" PT x 3/8" Tube
222062	(06853)	4730-00-277-9282	1	Elbow, 1/2" PT x 3/8" Tube
230130	(06853)	4730-00-277-1896	1	Reducing bushing 1/2" PT x 1/4" PT
238807	(06853)	4730-00-427-5121	2	Pipe plug, 3/8"
238822	(06853)	4730-00-011-3176	2	Pipe plug, 1/2"
246089	(06853)	9330-00-177-8445	6	Insert, 3/8"Tube
246090	(06853)	4730-01-066-3363	2	Insert, 1/2"Tube
246623	(06853)		1	Tube, 3/8" x 16'
249226	(06853)		2	Pipe plug, 3/4"
290964	(06853)		8	Screw, Hex 3/8"-24 x 1-1/2"
298476	(06853)		8	Nut, self locking, 3/8"-24
65508	(06853)		6	Automatic Slack Adjuster 5"

M870A1 MATERIALS LIST

PART NO.	(CAGEC)	NSN	QNTY EACH TRAILER	NOMENCLATURE
103385	(06853)	4820-00-142-3036	1	Drain Cock
104561(	6853)		1	Relay Valve (R-12)
106345	(06853)		1	Relay Emergency Valve (RE-6)
109165	(06853)		2	Hose, 3/8" I.D. x 25" with swivel and adapter 3/8" PT (-65 degree
Farenheight				Temperature
109379	(06853)		1	Air Reservoir Tank
112472	(06853)		2	Reservoir Mounting Bracket
112473	(06853)		1	Tube 5/8"x 110"
202983	(06853)	5310-00-209-0933	8.	Washer, lock, 3/8"
204235	(06853)	5310-01-055-8817	8	Washer, flat, 3/8"
205102	(06853)		1	Elbow, 1/4" PT x 3/8" Tube
205103	(06853)	4730-00-288-9490	1	Tee, 1/4" PT x 3/8" Tube
205104	(06853)	4730-00-391-3809	1	Tee, 1/4" PT x 3/8" Tube (Pipe on Run)
217690	(06853)	4730-00-526-0284	1	Adapter, 1/4" PT x 1/2" Tube
220722	(06853)		2	Elbow, 45 Degree 1/4" PT x 3/8" Tube
221825	(06853)	4730-01-078-4317	2	Elbow 1/2" PT x 5/8" Tube
222063	(06853)	4730-00-837-1177	1	Adapter, 1/2" PT x 3/8" Tube
234680	(06853)		1.	Reducing Bushing, 3/4" x 1/2" PT
238807	(06853)	4730-00-427-5121	2....	Pipe plug, 3/8"
238822	(06853)	4730-00-011-3176	2....	Pipe plug, 1/2"
246089	(06853)	9330-00-177-8445	4....	Insert 3/8" Tube
246623	(06853)	1....		Tube, 3/8" x 16'
247608	(06853)	4730-00-434-6396 ..	.2	Insert, 5/8"Tube
249226	(06853)		1.	Pipe plug, 3/4"
290964	(06853)		8.	Screw, Hex Head, 3/8"-24 x 1-1/2"
298476	(06853)		8	Nut, self locking 3/8"-24
65344	(06853) ..		6	Automatic Slack Adjuster ASA-5 (6")

8. MWO PARTS LIST (Continued)

b. Kit. Modification kit consists of one box of parts. Shipping weight and size is:
c.

Weight, lbs	Size, ft	Cube
150	3X2X2	12.00

c. Bulk material

Nomenclature	NSN	Specification
Oil	9150-00-189-6727	MIL-L-2104C
Tape, Antiseizing	8030-00-889-3535	MIL-T-27730
Tag, Marker	9905-00-537-8954	MIL-T-12755

d. Removed parts disposition. Parts removed as a result of this MWO must be tagged and turned in to supply.
e.

9. SPECIAL TOOLS, JIGS, TEST MEASUREMENT AND DIAGNOSTIC EQUIPMENT (TMDE), AND FIXTURES REQUIRED.

a. Standard Tools.
(1) Drill motors: 1/4 and 1/2 inch chucks.
(2) Drill bits: 3/16, 3/8, 7/16.
(3) Tool Kit, General Mechanic.
(4) Shop Equipment, Automotive Maintenance and Repair: Organizational Maintenance No. 1.

b. Special Tools.
None.

c. Expendable Supplies and Materials supplied by the Unit.

Nomenclature	Part Number	NSN
Locknuts	MS 51922-9	5310-00-984-3806

PART I

10. MODIFICATION PROCEDURE FOR M870 BRAKE (BENDIX).

WARNING

To prevent injury to personnel or damage to equipment, Install jack stands under rear axles before removing wheels.

a. Remove Rear Axle Outer and Inner Tire and Wheel Assemblies. Refer to TM 5-2330-360-14&P.

NOTE

Before starting to loosen ten lug nuts on wheels, check lug nut stampings to determine the direction of rotation of nuts.

b. Remove Rear Deck Planks. Refer to TM 5-2330-360-14&P

10. MODIFICATION PROCEDURE FOR M870 BRAKE (BENDIX) (Continued).

11.

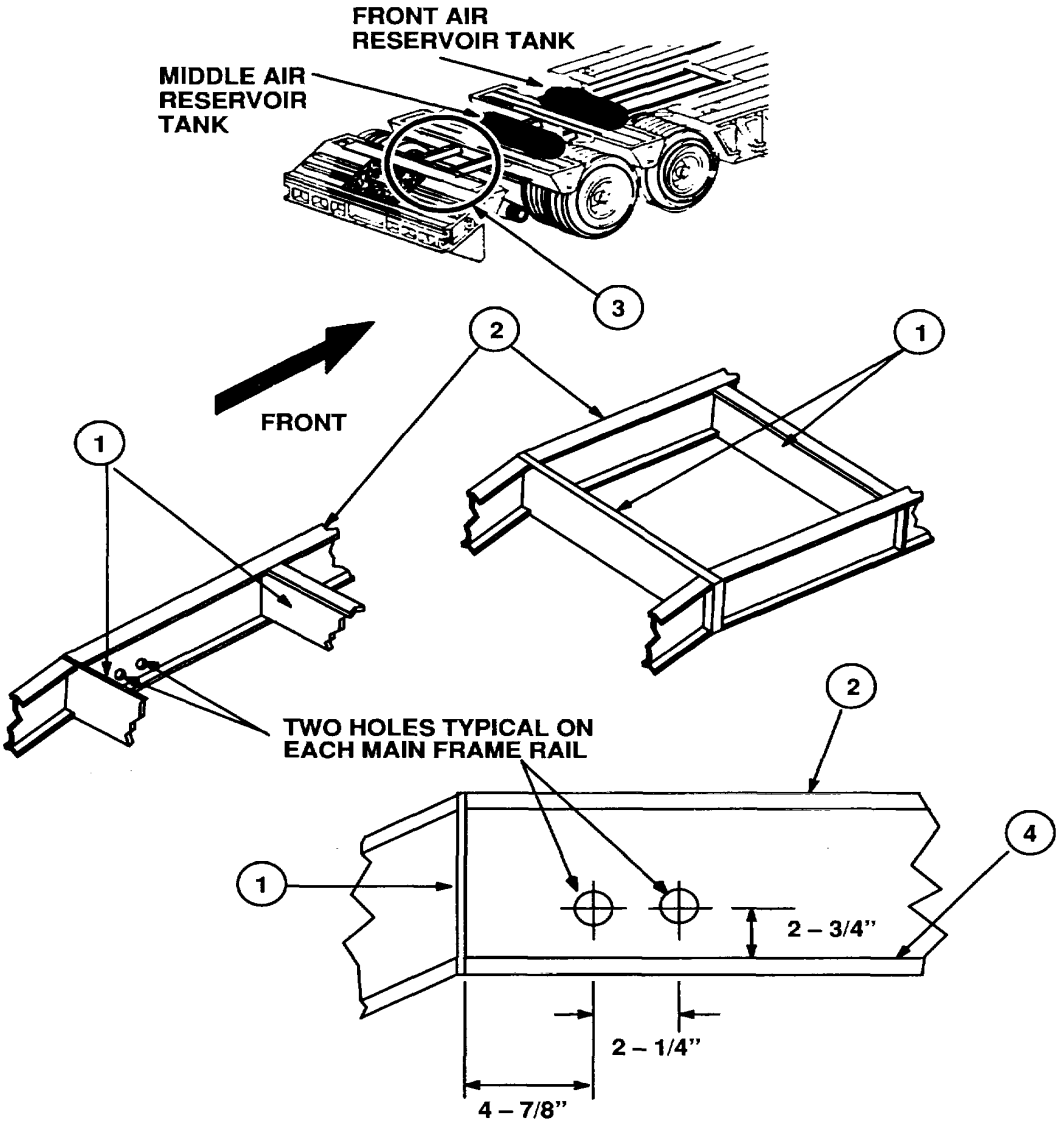

Figure 1.

c. Install Air Reservoir Mounting Brackets, PN 112472, and New Air Reservoir Assembly, PN 109379.

d. Refer to Figure 1.

(1) Locate main frame crossmember (1) on inside of semitrailer mainframe rails (2) behind rear axle (3) as shown.

(2) From mainframe crossmember (1), measure 4-7/8-inches forward and 2-3/4-inches up from the top of mainframe lower flange (4). Mark location using suitable scribe and center punch.

(3) From marked location, and on the same vertical line as shown, measure forward 2-1/4-inches and mark second location using suitable scribe and center punch.

(4) Repeat this procedure for opposite side of semitrailer.

10. MODIFICATION PROCEDURE FOR M870 BRAKE (BENDIX) (Continued).

WARNING

To prevent injury to eyes, wear safety goggles during all punching and drilling operations.

(5) Drill a 3/16-inch to 3/8-inch pilot hole and enlarge to a 7/16-inch hole in main frame rail (2) at the four locations marked. Have a helper apply lubrication during drilling.

e. Refer to Figure 2.

NOTE

If minor misalignment of new mounting bracket holes and frame holes occur, make adjustments by elongation of mounting bracket holes. Do not alter frame holes.

(1) Install two new mounting brackets (1), PN 112472, inside main frame rails with short side against frame rails (2) as shown. Aline hole of new mounting brackets with mating holes in mainframe as shown in Figure 2.

(2) Secure new mounting brackets (1) to main frame rails (2) using screws (3) PN 290964, flatwashers (4) PN 204235, lockwashers (5) PN 202983 and locknuts (6) 298476. Torque locknuts (6) as specified in torque table located as appendix.

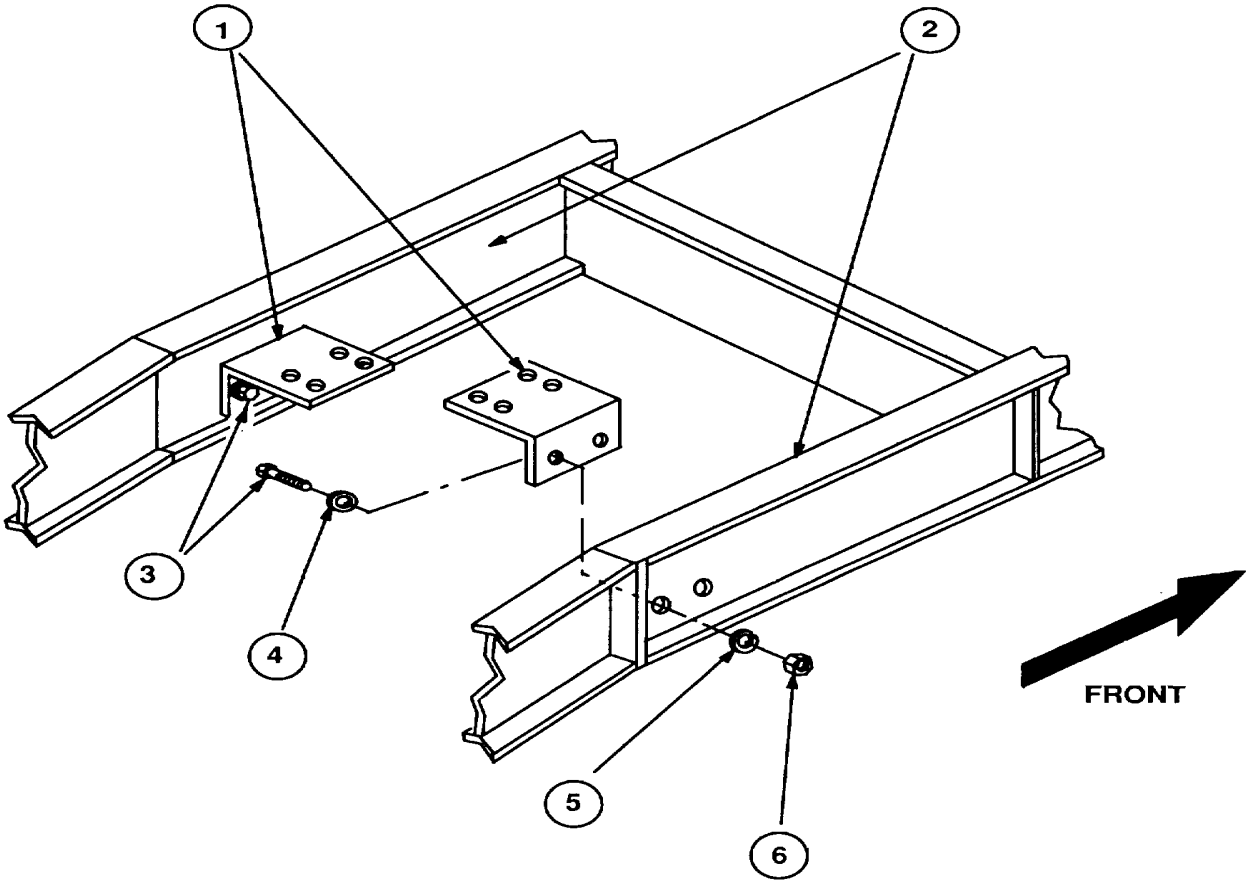

Figure 2.

10. MODIFICATION PROCEDURE FOR M870 BRAKE (BENDIX) (Continued).

f. Assemble New Relay Emergency Valve 106345, and Install Onto Rear Air Reservoir Tank.

NOTE

Before installing fittings into valve, or tank, wrap fitting threads with two turns of Antiseizing Tape MIL-T-27730

Refer to Figure 3.

(1) Install two pipe plugs (1), PN 238807 in front delivery ports of valve (2).

(2) Install 45-degree elbow (3), PN 220722, into top port of relay emergency valve (2), facing to right side of trailer.

(3) Install 45-degree elbow (4), PN 220722, into bottom port of relay emergency valve (2), facing to left side of trailer.

(4) Install relay emergency valve (2) into rear air reservoir tank (5) by screwing fitting (6f. attached to valve

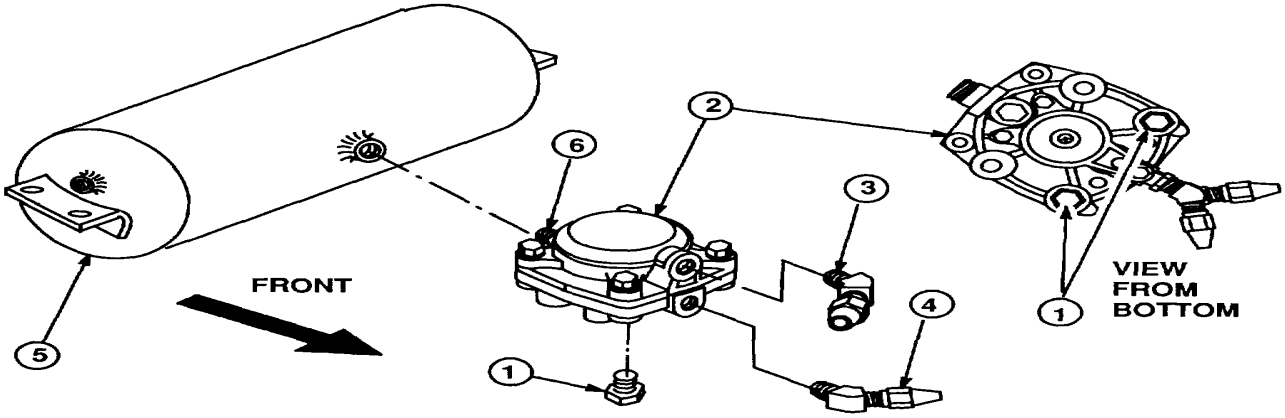

Figure 3.

Refer to Figure 4.

(5) Install plug (1), PN 249226, into tank port (2) and plug (3), PN 238822, into tank port (4).

(6) Install drain cock (5) PN 103385 into bottom port (6) of tank (7).

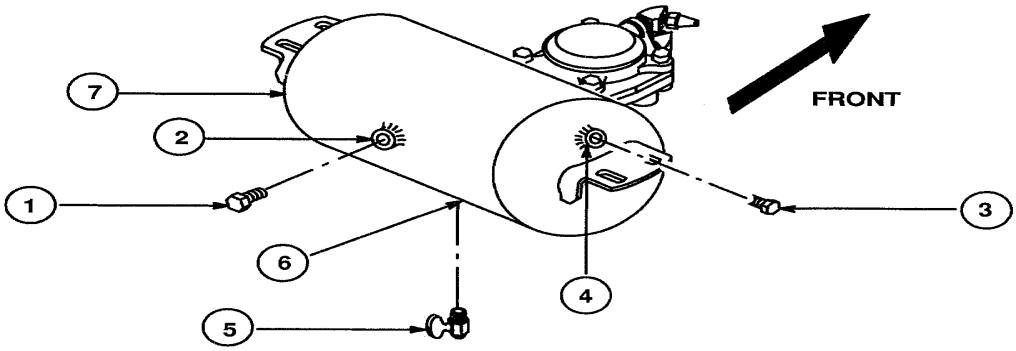

Figure 4.

10. MODIFICATION PROCEDURE FOR M870 BRAKE (BENDIX) (Continued).

g. Install New Rear Air Reservoir to Mounting Brackets

Refer to Figure 5.

(1) Install new rear air reservoir assembly (1) to the bottom of the mounting brackets (2) as shown

(2) Make sure rear relay valve on rear air reservoir is facing forward and is secure. Secure reservoir (1) to brackets (2) with four screws (3), PN 290964, four flat washers (4), PN 204235, four lock washers (5), PN 202983, and four locknuts (6), PN 298476.

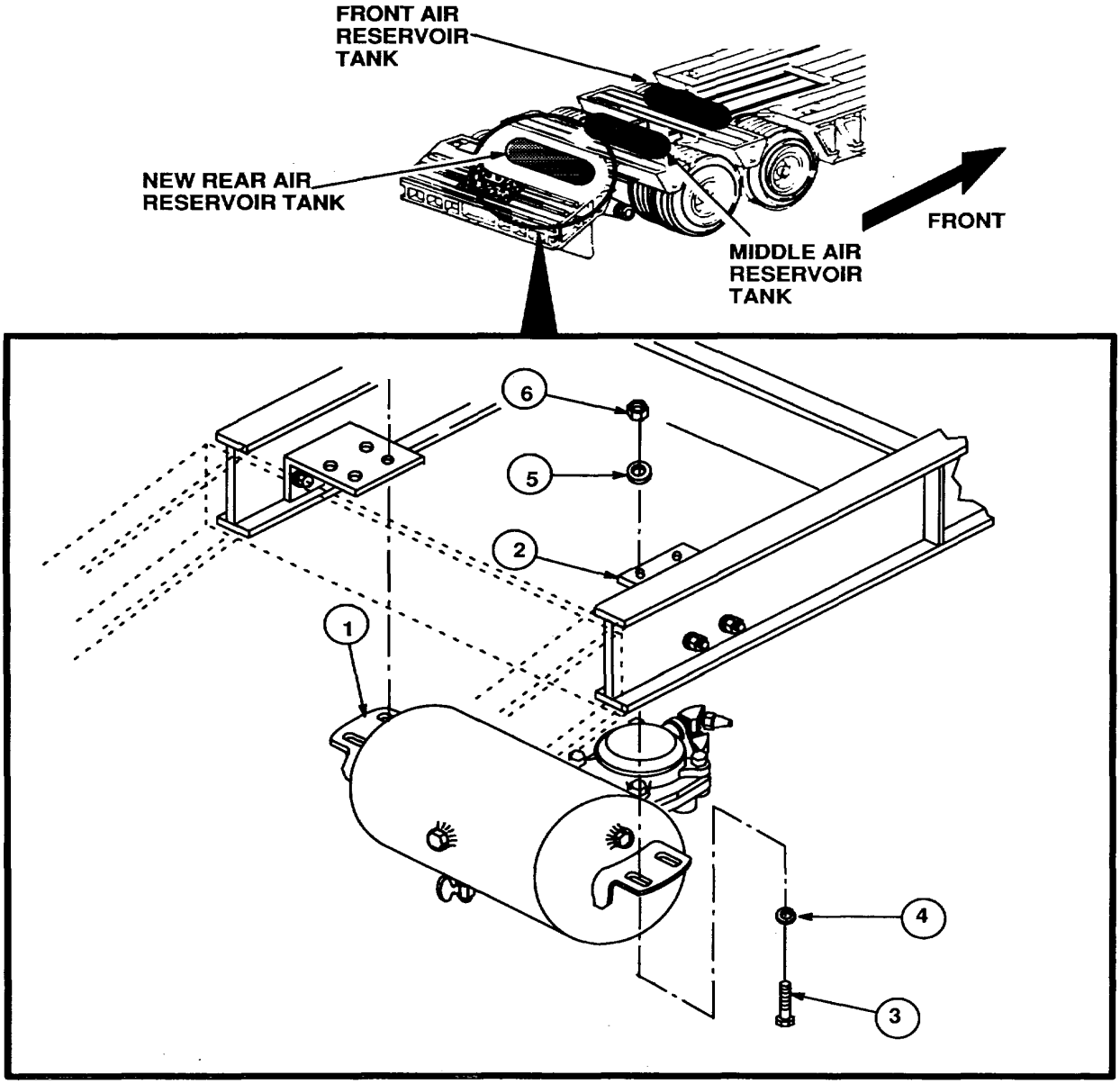

Figure 5.

10. MODIFICATION PROCEDURE FOR M870 BRAKE (BENDIX) (Continued).

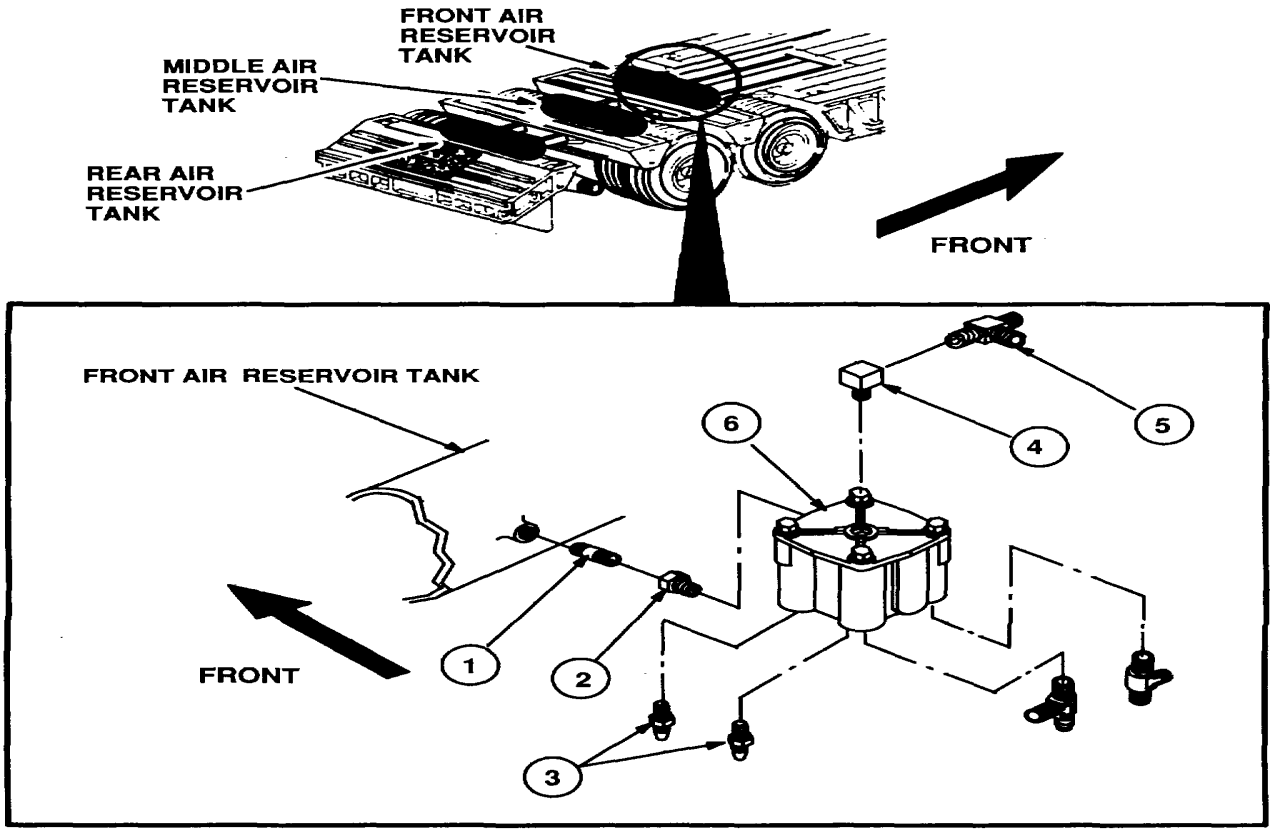

Figure 6.

h. Remove old emergency relay valve from front Air Reservoir Assembly.

NOTE

For identification of air lines during installation, tag and identify all air lines and fittings prior to removal using Marker Tag MIL-T-12755.

NOTE

To prevent damage to fitting ends, before removing fittings from valve or tanks, wrap fitting ends with Masking Tape, MIL-T-27730.

Refer to Figure 6

(1) Identify, tag and disconnect all air lines from old emergency relay valve.
(2) Remove old emergency relay valve (6), pipe nipple (1), with reducing bushing (2) from front air reservoir.

(3) Remove pipe nipple (1), with reducing bushing (2) from valve (6). Tag pipe nipple (1) and bushing (2). Set aside for reuse.

(4) Remove two front delivery straight adapters (3) from valve (6). Tag and set straight adapters aside for reuse.

(5) Remove top elbow (4) and tee (5) from valve (6). Tag and set top elbow and tee aside for reuse.

(6) Remove all remaining fittings from valve (6), clean and dispose of valve and fittings in accordance with paragraph 8d.

10. MODIFICATION PROCEDURE FOR M870 BRAKE (BENDIX) (Continued).

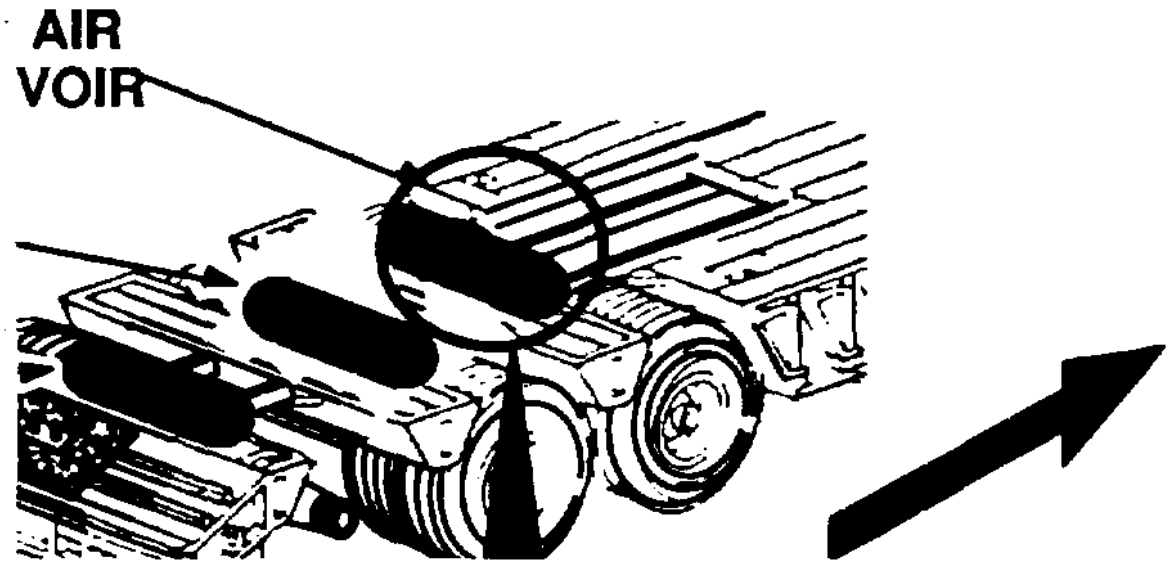

i. Install New Emergency Relay Valve PN 104561 on Front Air Reservoir Tank.

NOTE

The new emergency relay valve comes with a new bracket supplied. The bracket will not be needed for this installation. Dispose of bracket as described in paragraph 8d.

Refer to Figure 7.

(1) Obtain new emergency relay valve, PN 104561.

NOTE

To prevent mixup between valves, before installing new relay valve, check part number of valve. Both emergency relay valves look identical but have different internal components.

(2) Remove masking tape from threads of pipe nipple (1), reducing bushing (2), two straight adapter (3), top elbow (4), and tee (5). Thoroughly clean nipple, bushing, two straight adapters, elbow, and tee.

10. MODIFICATION PROCEDURE FOR M870 BRAKE (BENDIX) (Continued).
11.

i. Install New Emergency Relay Valve PN 104561 on Front Air Reservoir Tank (Continued).

NOTE

Before installing fitting into valve, or tank, wrap fitting threads with two turns of Antiseizing Tape MIL-T-27730.

(3) Install pipe nipple (1) and bushing (2) in front port of valve (6). Install elbow (4) and tee (5) in the top port of valve (6) so that one opening of tee faces right side of trailer and other tee opening faces trailer rear. Install two straight

(4) Install two straight adapters (3) in the bottom delivery ports of valve (6) closest to front port pipe nipple. Install two new straight adapters (7), PIN 112553, in bottom delivery ports.

(5) Install new emergency relay valve (6), in center port of front air tank reservoir with elbow and tee on top.

j. Connect Air Chamber Service Hoses and Air Lines. Refer to Figure 8.

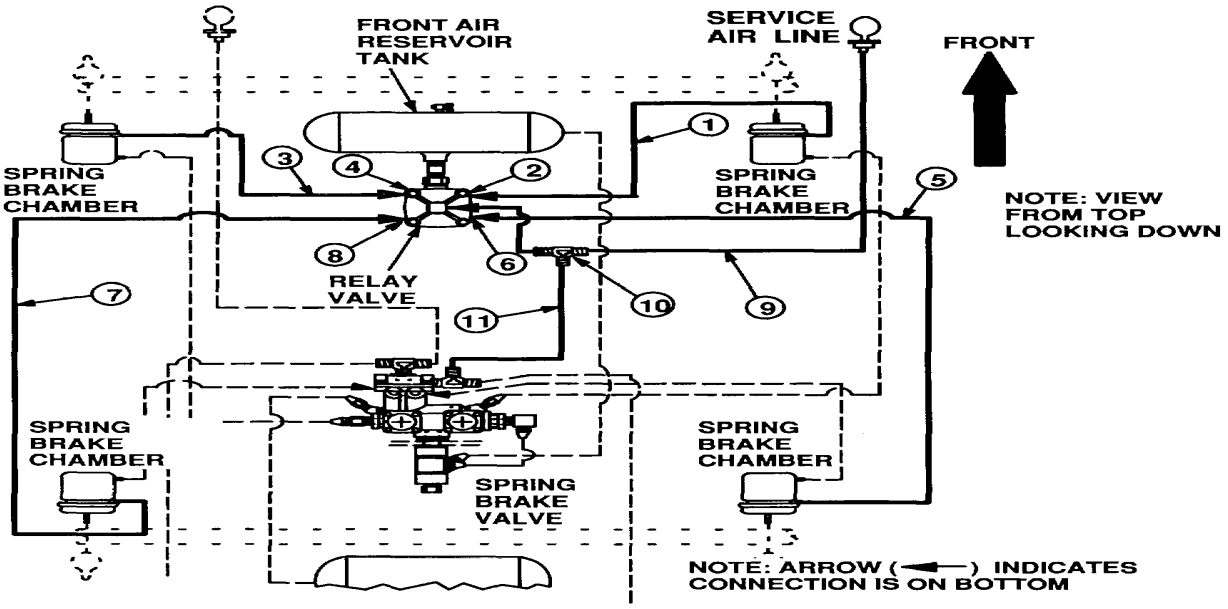

Figure 8.

(1) Connect front axle right air chamber service air hose (1), to new emergency relay valve right front delivery straight adapter (2).

(2) Connect front axle left air chamber service air hose (3), to new emergency relay valve left front delivery straight adapter (4).

(3) Connect middle axle right air chamber service air hose (5), to new emergency relay valve right rear delivery straight adapter (6).

(4) Connect middle axle left air chamber service air hose (7), to new emergency relay valve left rear delivery straight adapter (8).

(5) Connect service air line 3/8 - inch tube (9) to new relay valve tee (10), right connection.

(6) Connect spring brake valve air line (11) to rear of new emergency relay valve tee (10).

10. MODIFICATION PROCEDURE FOR M870 BRAKE (BENDIX) (Continued).

k. Remove old Spring Brake Valve.

NOTE

For identification of fittings during installation, tag and identify all fittings and lines prior to removal using Marker Tag MIL-T-12755.

(1) Identify, tag and disconnect air lines and hoses from spring brake valve (5). Refer to TM 5-2330-360-14&P

(2) Remove spring brake valve, including all fittings from middle air reservoir tank. Refer to TM 5-2330-360-14&P.

NOTE

To prevent damage to fitting ends, before removing fittings from valve or tanks, wrap fitting ends with Masking Tape, MIL-T-27730.

Refer to Figure 9

(3) Install plug (1), PN 249226 in middle air reservoir tank center port (2).

(4) Remove two bottom delivery elbows (3), two side delivery straight adapters (4) from spring brake valve (5). Set aside for reuse. Remove all remaining fittings and dispose of valve and fittings as described in

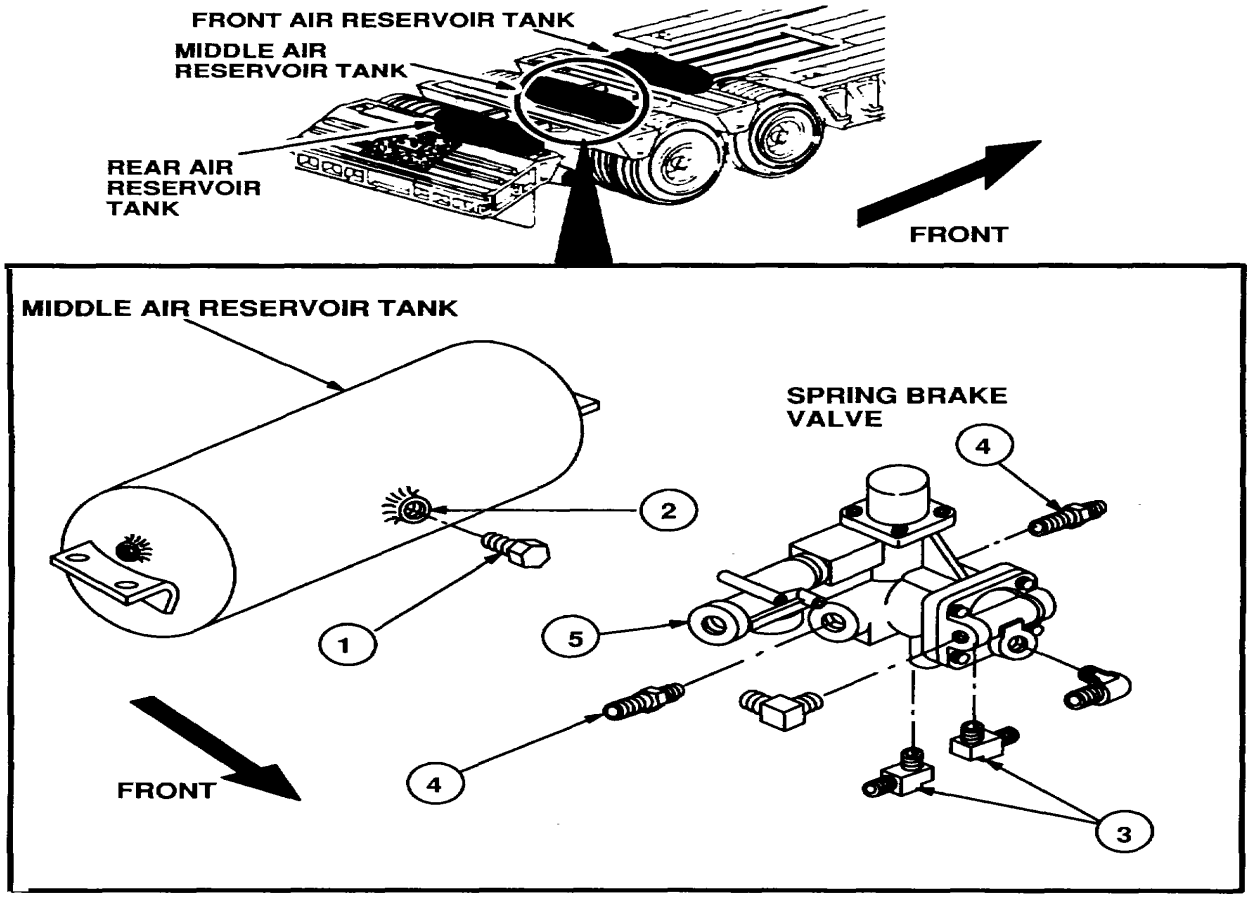

Figure 9.

10. MODIFICATION PROCEDURE FOR M870 BRAKE (BENDIX) (Continued).

I. Mount New Spring Brake Valve PN 101622 on New Bracket PN 112479.

Refer to Figure 10.

CAUTION

To prevent damage to spring brake valve body when using vise for installation of fittings, install large cross-fitting (3) into vise instead of valve.

NOTE

Before installing fitting into valve, or tank, wrap fitting threads with two turns of Antiseizing Tape MIL-T-27730 Teflon antisieze tape is not required for brass-to-brass fittings.

(1) Mount valve (1) on bracket (2) with valve body forward of bracket when mounted and secure with large cross fitting (3), PN 112520, perpendicular to bracket (2), with lockwasher (4), PN 201946, on valve side of bracket.

(2) Install delivery elbows (5) In valve (1) bottom delivery ports.

(3) Install two side delivery straight adapters (6) in valve (1) side delivery ports.

(4) Install elbow (7), PN 222062 in large cross fitting top port facing to the right when mounted.

(5) Install reducing bushing (8), PN 230130 in large cross fitting bottom port.

(6) Install elbow (9), PN 112521 in reducing bushing (8) facing forward at a two o' clock position when mounted. Install plug (10), PN 238822 in rear port of large cross fitting (3)

(7) Install elbow (11), PN 205102 in right rear port of valve (1) facing to the rear at the ten o' clock position.

(8) Install straight adapter (12), PN 217690 in left rear port of valve (1).

(9) Install tee (13), PN 205104 in right front port of valve (1) with opening facing right and one opening facing forward.

(10) Install tee (14), PN 205103 in front port of valve (1), fitting to be horizontal.

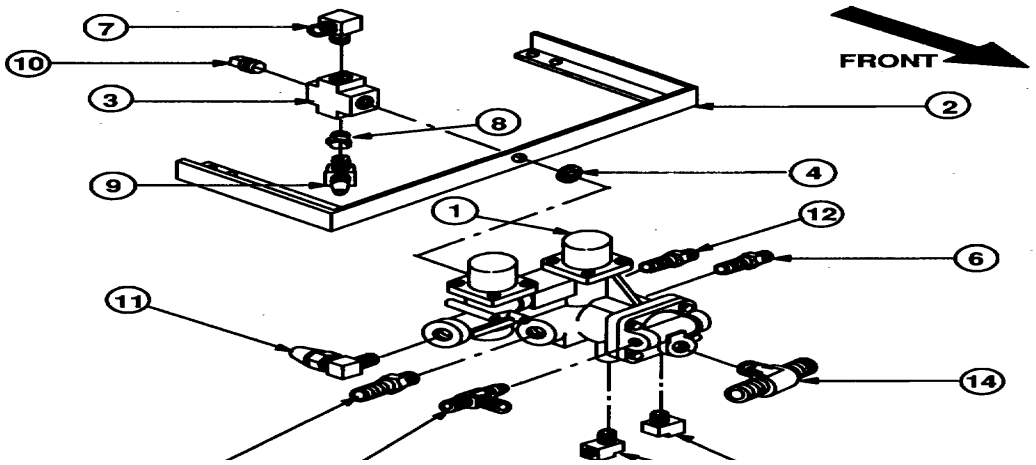

Figure 10.

10. MODIFICATION PROCEDURE FOR M870 BRAKE (BENDIX) (Continued).

m. Install Spring Brake Valve With Bracket, Tubing, Sleeves, and Inserts.

Refer to Figure 11.

(1) Cut a new 7-inch length of 3/8-inch O.D. air line tubing (1) from PN 246623 to run from large cross fitting top elbow (2) to spring brake valve right rear elbow (3).

(2) Remove 3/8-inch air line combined tubing nuts (4) and sleeves (5) from large cross fitting top elbow (2) and spring brake valve right rear elbow (3).

(3) Install 7-inch length of tubing (1) onto elbows (2) and (3) as shown in figure 1 la, using insert, PN 246089.

(4) Connect completed 3/8-inch air line tubing assembly (1) to large cross fitting top elbow (2), and to spring brake valve right rear elbow (3).

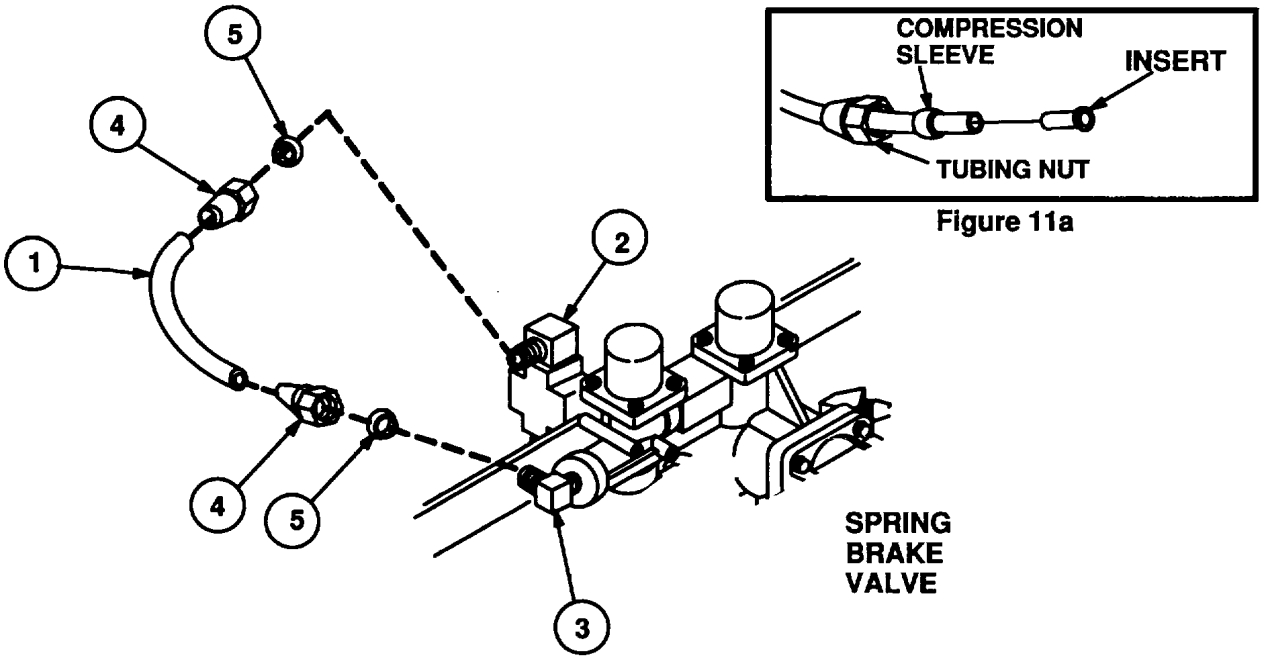

Figure 11.

10. MODIFICATION PROCEDURE FOR M870 BRAKE (BENDIX) (Continued).

n. Install Assembled Spring Brake Valve Assembly with Bracket on Middle Air Reservoir Tank and Bracket.

Refer to Figure 12 and perform the following:

(1) Install valve assembly with bracket attached (1) on top of middle air reservoir tank bracket with delivery ports facing down.

(2) Using existing hardware secure spring brake and bracket to middle air tank bracket with four screws (2), four flat washers (3), four lockwashers (4) and four lock nuts (5).

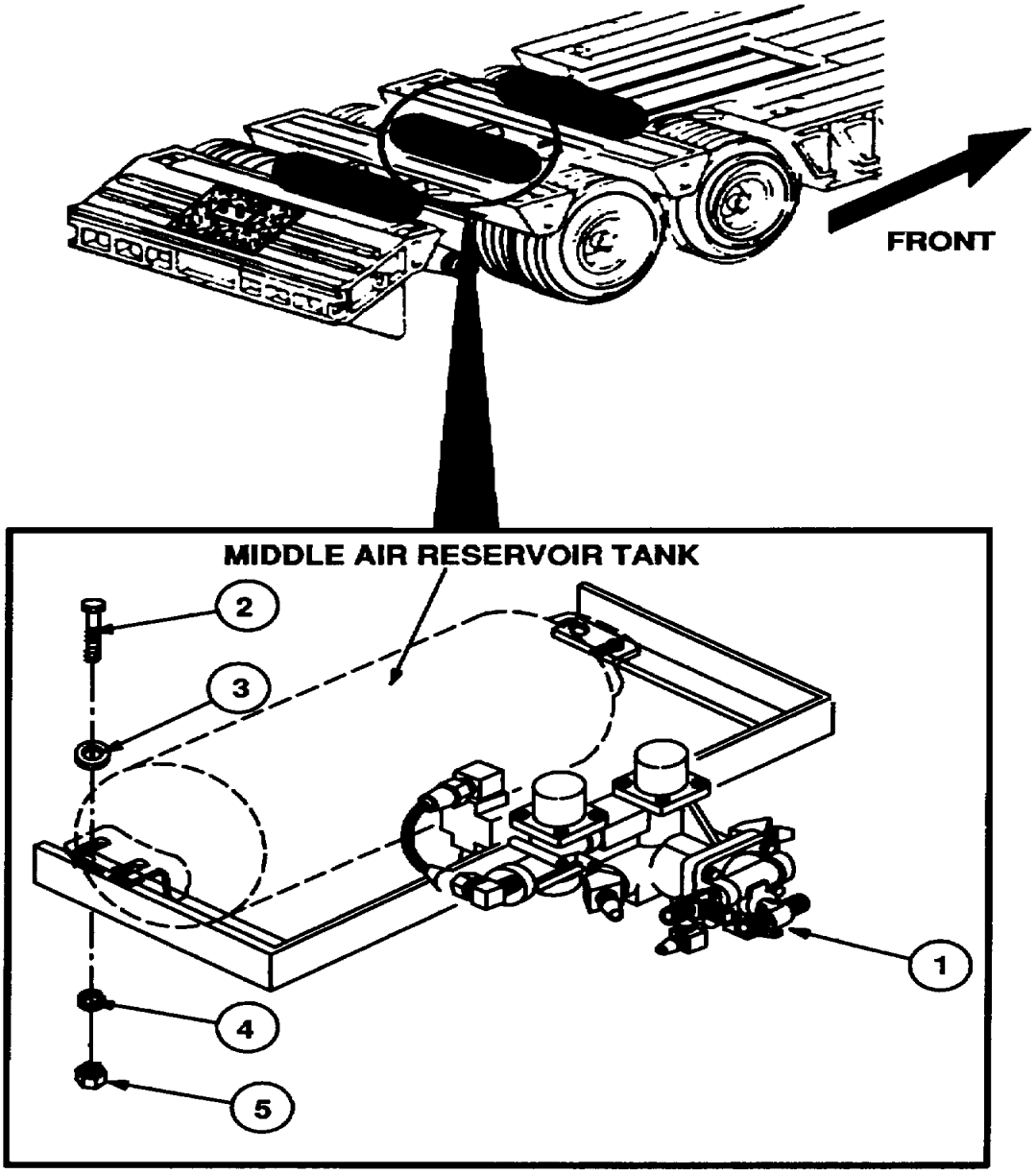

Figure 12.

10. MODIFICATION PROCEDURE FOR M870 BRAKE (BENDIX) (Continued).

o. Connect Air Chamber Emergency Hoses and Air Lines to New Spring Brake Valve.

Refer to Figure 13.

(1) (View A). Connect middle axle right air chamber emergency air hose (1) to new spring brake valve right bottom elbow (2).

(2) (View A). Connect middle axle left air chamber emergency air hose (3), to new spring brake valve left bottom elbow (4).

(3) (View B). Connect front axle right air chamber emergency air hose (5), to new spring brake valve right straight adapter (6).

(4) (View C). Connect front axle left air chamber emergency air hose (7), to new spring brake valve left straight adapter (8).

(5) (View D). Connect front air reservoir tank hose (9), to large cross fitting bottom elbow (10).

(6) (View A). Connect service air line 3/8-inch tube (11) from new relay valve tee to spring brake valve right tee front connection (12).

(7) (View A). Connect emergency air line 3/8-inch tube (13) to spring brake valve front tee (14) right connection.

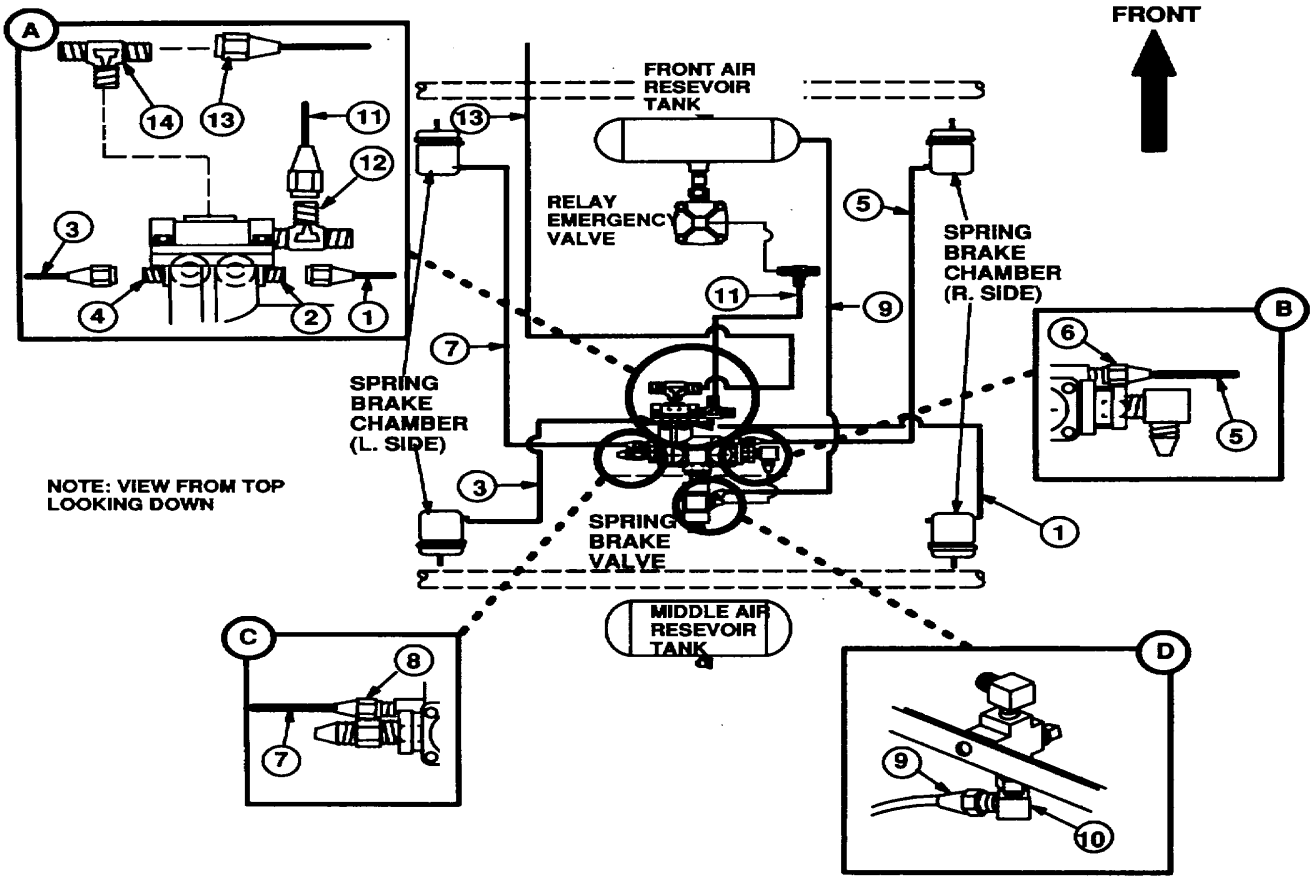

Figure 13.

10. MODIFICATION PROCEDURE FOR M870 BRAKE (BENDIX) (Continued).

p. Install New Spring Brake Emergency and Service Air Tubing.

Refer to Figure 14 and perform the following:

(1) To determine length of tubing needed, run a new emergency air line(3/8"tube) (2), PN 246623, (Figure 14a) from spring brake valve, front tee, left connection (1). rearward along left main frame rail. Go over crossmember at same location as the wiring harness. Go to rear air reservoir tank relay emergency valve lower 45 degree elbow (3).

(2) Remove tubing nut and sleeve from spring brake valve, front tee, left connection (1). Install tubing nut, sleeve, and tubing insert (Figure 14b), PN 246089. on spring brake valve end of new 3/8-inch emergency air line tubing (2). Connect new emergency air line to spring brake valve, front tee, left connection (1).

(3) Recheck routing and length of new emergency air line (2) to rear air reservoir tank relay emergency valve. Mark the length and cut the new emergency air line at the relay emergency valve location.

(4) Remove tubing nut and sleeve from relay emergency valve lower 45 degree elbow (3). install tubing nut, sleeve, and tubing insert PN 246089, on relay emergency valve end of new 3/8-inch emergency air line tubing. Connect new emergency air line (2) to relay emergency valve lower 45 degree elbow (2).

(5)

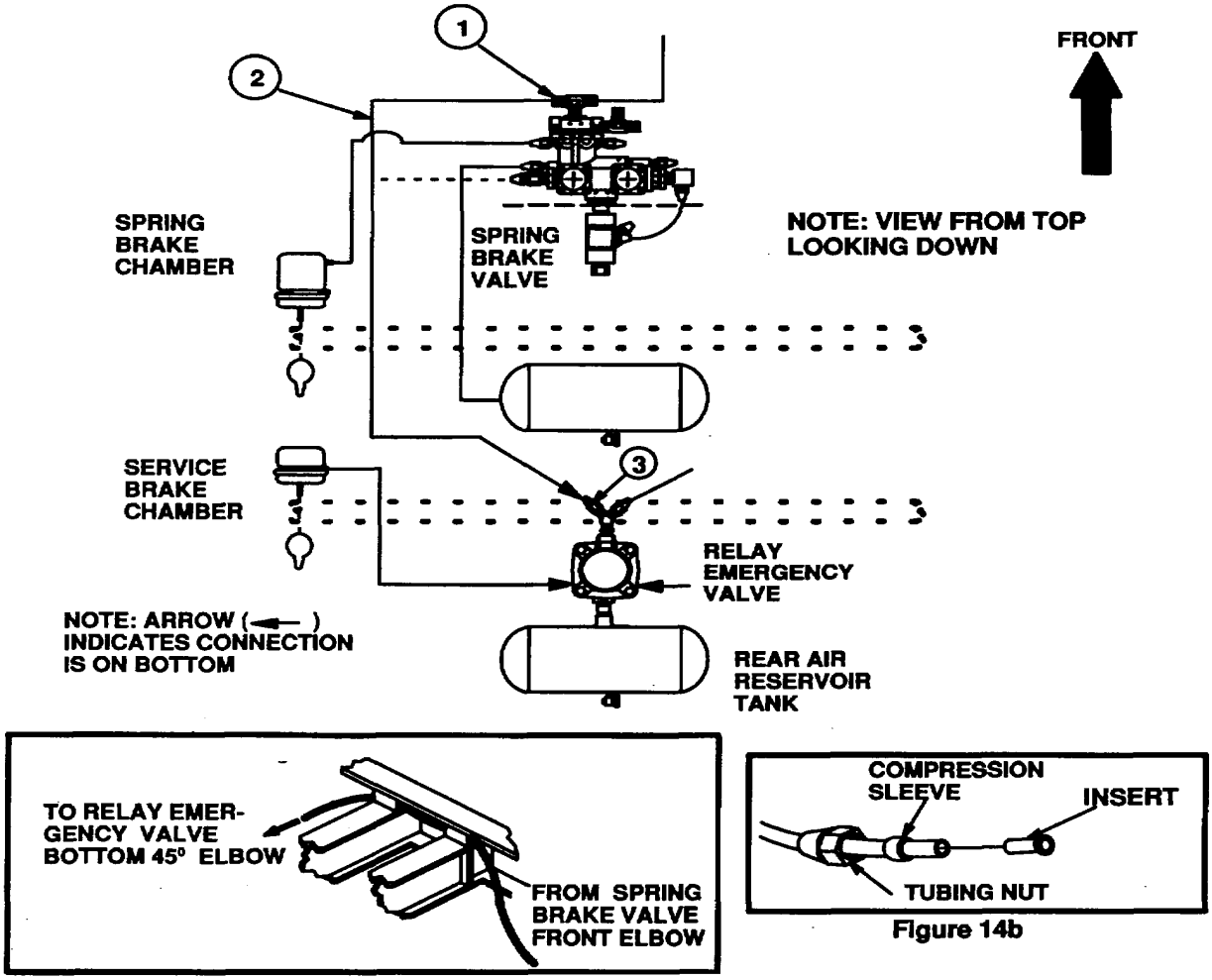

Figure 14.

10. MODIFICATION PROCEDURE FOR M870 BRAKE (BENDIX) (Continued).

q. Install New Spring Brake Emergency and Service Air Tubing (Continued).

Refer to Figure 15 and perform the following:

(1) To determine the length of tubing needed, run a new 3/8-inch service air line tubing (1) from spring brake valve right tee right connection (2) rearward along the right main frame rail (Figure 15a). Go over the crossmember in the same manner as the new emergency air line. proceed to the rear air reservoir tank relay emergency valve upper 45 degree elbow (3).

(2) Remove combined tubing nut, and sleeve from spring brake valve right tee right connection (2). Install combined tubing nut, sleeve, and tubing insert, PN 246089 (Figure 15b). on the spring brake valve end of the new 3/8-inch service air line tube (1).

(3) Connect new 3/8-inch service air line (1) to the spring brake valve right tee right connection (2).

(4) Recheck routing and length of the new 3/8-inch service air line (1) to rear air reservoir tank relay emergency valve. Mark the length and cut the new service air line (1) at the relay emergency valve location.

(5) Remove tubing nut and sleeve from the relay emergency valve upper 45-degree elbow (3). Install tubing nut, sleeve, and tubing insert. PN 246089, on the relay emergency valve end of the new 3/8-inch service air line tubing (1). Connect new service air line to the relay emergency valve upper 45 degree elbow (3).

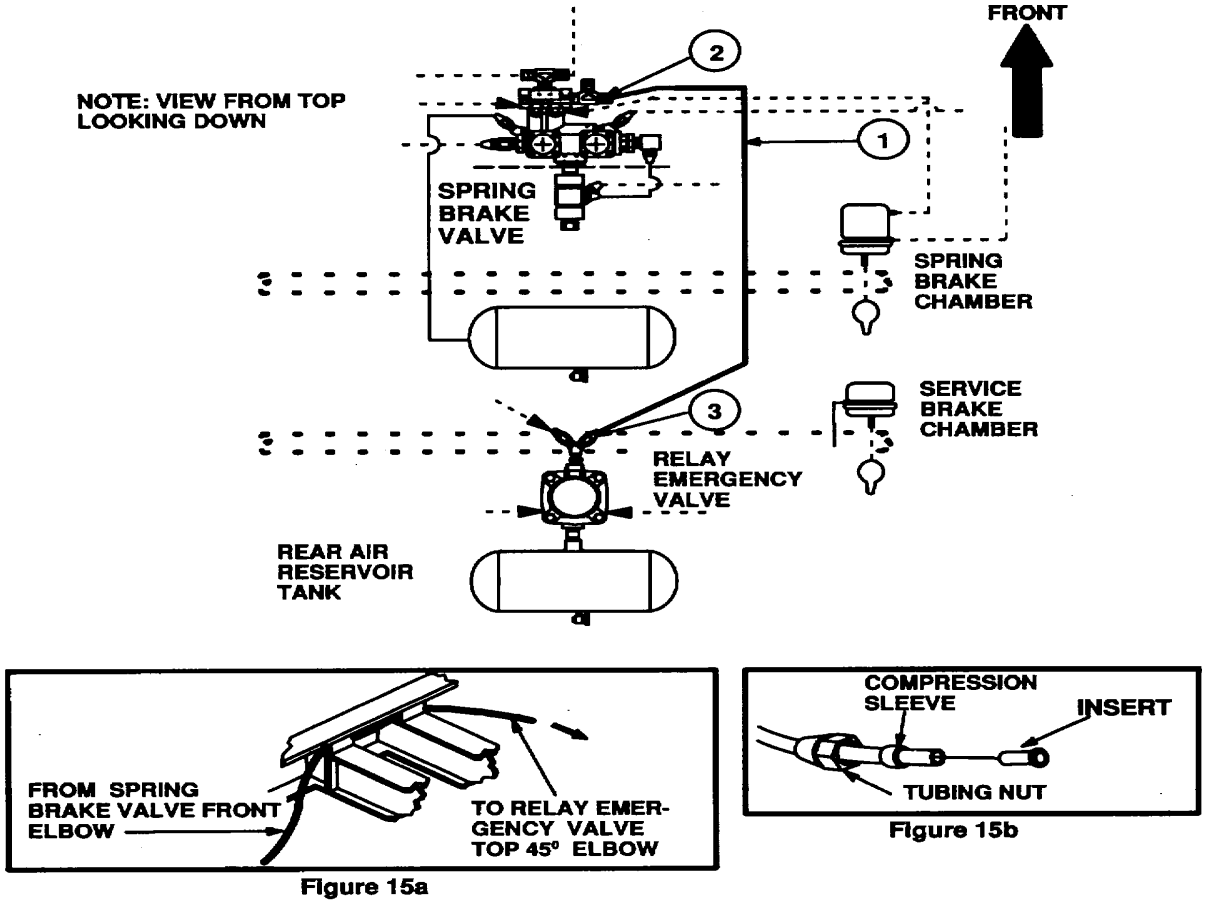

Figure 15.

10. MODIFICATION PROCEDURE FOR M870 BRAKE (BENDIX) (Continued).

r. Install Middle Air Reservoir Air Line and Fitting.

(1) Refer to TM 5-2330-360-14&P. Remove the middle air reservoir top left end plug. Dispose of plug in accordance with paragraph 8d.

NOTE

Install reducing bushing PN 212862 in the middle air reservoir left end port if necessary.

Refer to Figure 16.

(2) Install elbow (1). PN 220475, in the middle air reservoir tank left end port, facing forward.

(3) install new 1/2" x 23" air line (2), PN 112518, with insert, PN 246090, from the middle air reservoir tank left elbow (1), to spring brake valve left rear straight adapter (3), PN 217690.

s. Install New Relay Emergency Valve Air Delivery Hoses

(1) Refer to TM 5-2330-360-14&P. Remove the rear axle brake chamber air hoses. and elbows. Dispose of fittings hoses, and elbows in accordance with paragraph 8d.

(2) Install new service air hose with adapter (4), PN 109165, from the rear axle right air chamber to relay emergency valve right rear delivery port (5).

(3) Install new service air hose with adapter (7), PN 109165, from the rear axle left air chamber to relay emergency valve left rear delivery port (6).

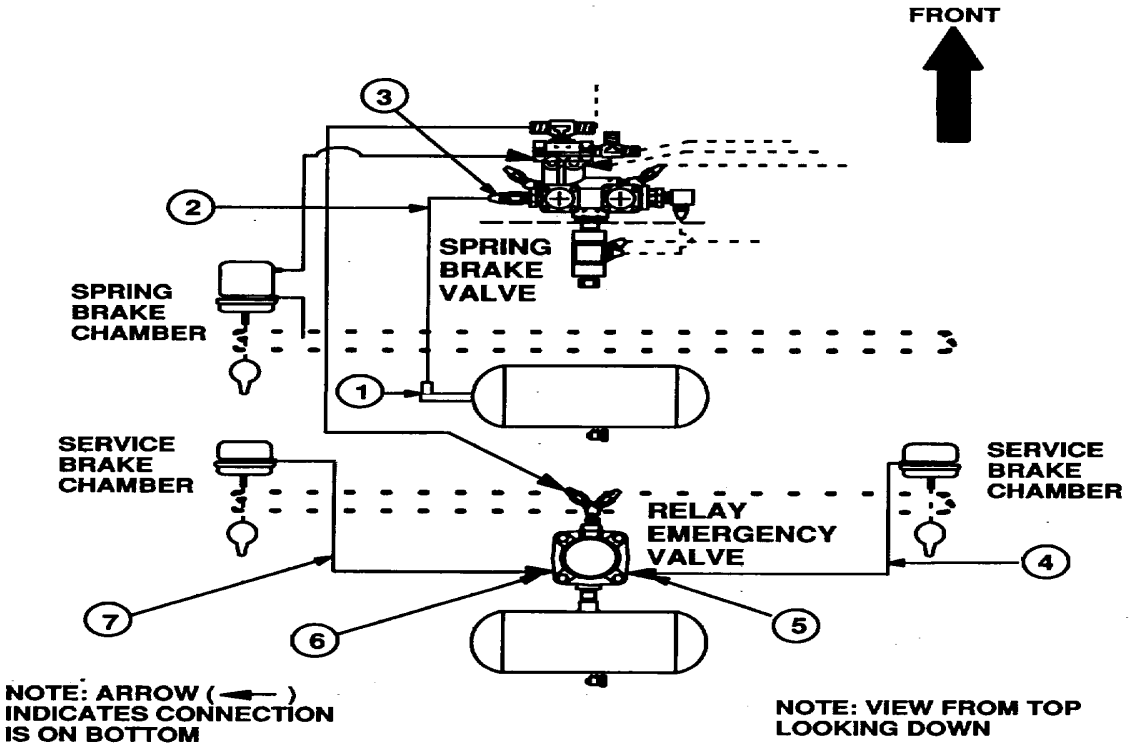

Figure 16.

10. MODIFICATION P4OCEDURE FOR M870 BRAKE (BENDIX) (Continued).

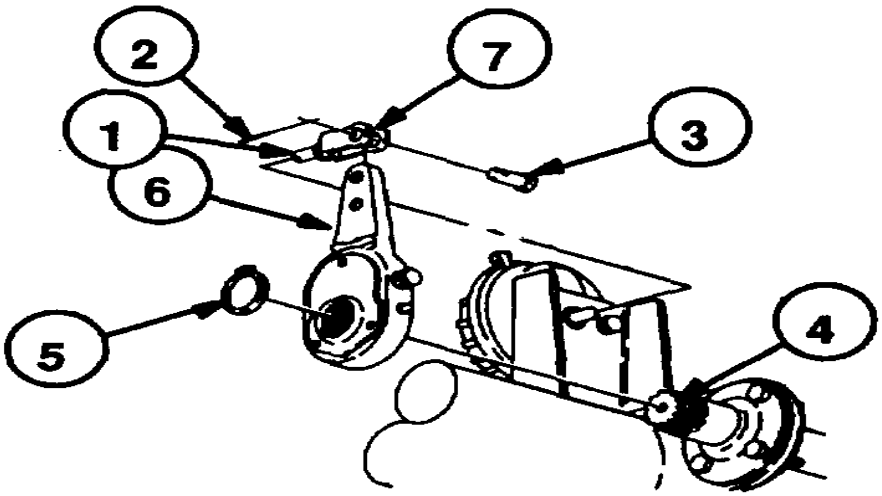

Figure 17.

t. Replace Slack Adjusters. Refer to TM 5-2330-360-14&P.

NOTE

Release brakes. Cage if necessary.

CAUTION

When using hammer to tap off slack adjuster, try not to strike "S" cam shaft-to-axle mounting bracket, If bracket is struck during slack adjuster removal, inspect base of bracket for cracks. If required straighten bracket and repair cracks by welding.

(1) Refer to Figure 17.

(a) Loosen clevis jam nut (1).

(b) Remove cotter pin (2), clevis pin (3), retainer ring (5), and slack adjuster (6) from camshaft (4). lean and dispose of cotter pin, clevis pin, and slack adjuster as described in paragraph 8d. Clean and set aside retaining ring for reuse.

(c) Remove the brake chamber clevis rod end (7) and dispose of in accordance with paragraph 8d.

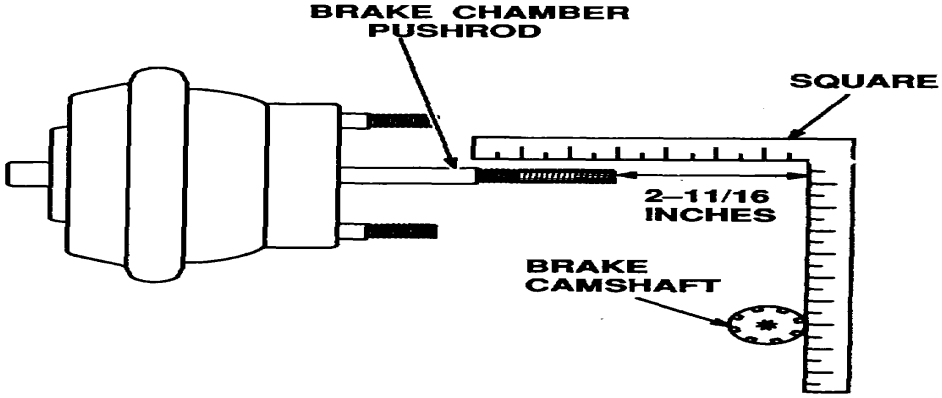

Figure 18.

10. MODIFICATION PROCEDURE FOR M870 BRAKE (BENDIX) (Continued).

(2) Check brake chamber push rod for proper length as follows:

Refer to Figure 18.

(a) With the brake chamber in the released position (cage if necessary), place a square (or equivalent object) so that one edge is parallel with the brake chamber push rod and the other edge is against the camshaft.

(b) Measure the gap from the end of the brake chamber push rod to the vertical edge of the square.

(c) If the gap measurement is less than 2-11/16 inches, the push rod must be shortened. If the
(d)

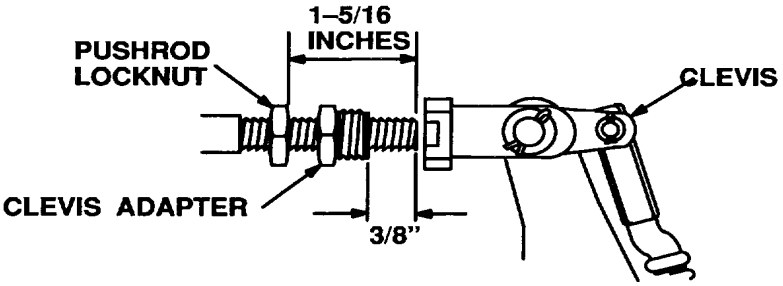

Figure 19.

Refer to Figure 19.

(d) Position the brake chamber push rod locknut approximately 1-5/16 inches from the threaded end. Thread the clevis adapter on the push rod to about 3/8-inches from threaded end.

(e) Install Automatic Slack Adjuster-5 (ASA-5) on the brake camshaft. Reuse retaining ring set aside during slack adjuster removal.

Refer to Figure 20.

(f) Turn ASA-5 adjustment hex clockwise until clevis adapter extends into threaded bore of clevis approximately 1/8-inch. Thread adapter into clevis and tighten snug.

(g) Place square or other suitable straight edge so that one edge of square is parallel with brake chamber push rod and the other edge is against the outer edge of the camshaft.

(h) Measure the gap measurement between the outside of camshaft and the center of clevis pin. The distance shall be not less than 1-1/2-inches, nor more than 2-3/4-inches.

(i) Torque clevis adapter to 10 pound-feet (14 Newton Meters). Run push rod locknut down against clevis adapter. Hold adapter with wrench and tighten locknut to 34 - 50 pound-feet (45 - 67 Newton
Meters).

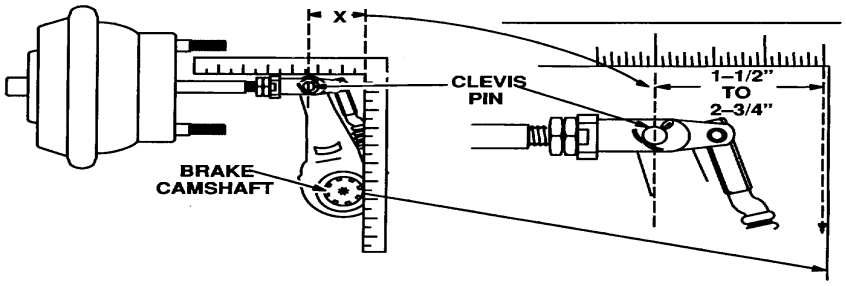

Figure 20.

10. MODIFICATION PROCEDURE FOR M870 BRAKE (BENDIX) (Continued).

(3) Manually adjust brakes as follows:

(a) Rotate adjustment hex clockwise until brake linings are snug against the brake drum.
(b) Turn adjustment hex counter-clockwise 1/4-turn. (Approximately 70 pound-feet of effort Is required to override automatic adjusting mechanism.)

(c) Refer to Figure 20. Pull brake chamber push rod to confirm that approximately 1/2-inch of free stroke exist.

(4) Uncage spring brakes (if necessary).

Apply 90 to 95 psi air pressure from towing vehicle air gage. Make and hold full brake application to check that brake chamber push rod stroke is below the re-adjustment limit of 2 inches.

Repeat steps 1O.s.(2).(d). through 1 0.s.(4). as necessary, threading adapter an additional 1/16-inch each time, to bring brakes in to proper adjustment, .

u. Serviceability Testing (Leakage Test).

Test and check brakes for serviceability as follows:

(a) Connect air brake system to towing vehicle (Refer to TM5-2330-360-14&P).

(b) Coat all drain cocks, pipe plugs and air line connections, affected by this modification, with soapsuds.

(c) Check all drain cocks, pipe plugs and connections for leakage. No leakage is permitted.

(d) Tighten all leaking connections as required and perform serviceability testing until no sign of leakage occurs.

v. Reinstall Tires and Remove Jackstands. Refer to TM 5-2330-360-14&P.

w. Update Vehicle Data Plate as described in paragraph 14c.

END OF TASK.

PART II

10. MODIFICATION PROCEDURE FOR M870A1 BRAKE (BENDIX)

WARNING

To prevent Injury to personnel or damage to equipment, place Jack stands under rear axle before removing wheels.

a. Remove Rear Wheels. Refer to TM 5-2330-378-14&P.

(1) Drain all air reservoir tanks.

NOTE

Before starting to loosen ten lug nuts on wheels, check lug nut stampings to determine the direction of rotation of nuts.

(2) Install jack stands and remove rear wheels.

10. INSTALLATION PROCEDURE M870A1 BRAKE MOD (BENDIX) (Continued).

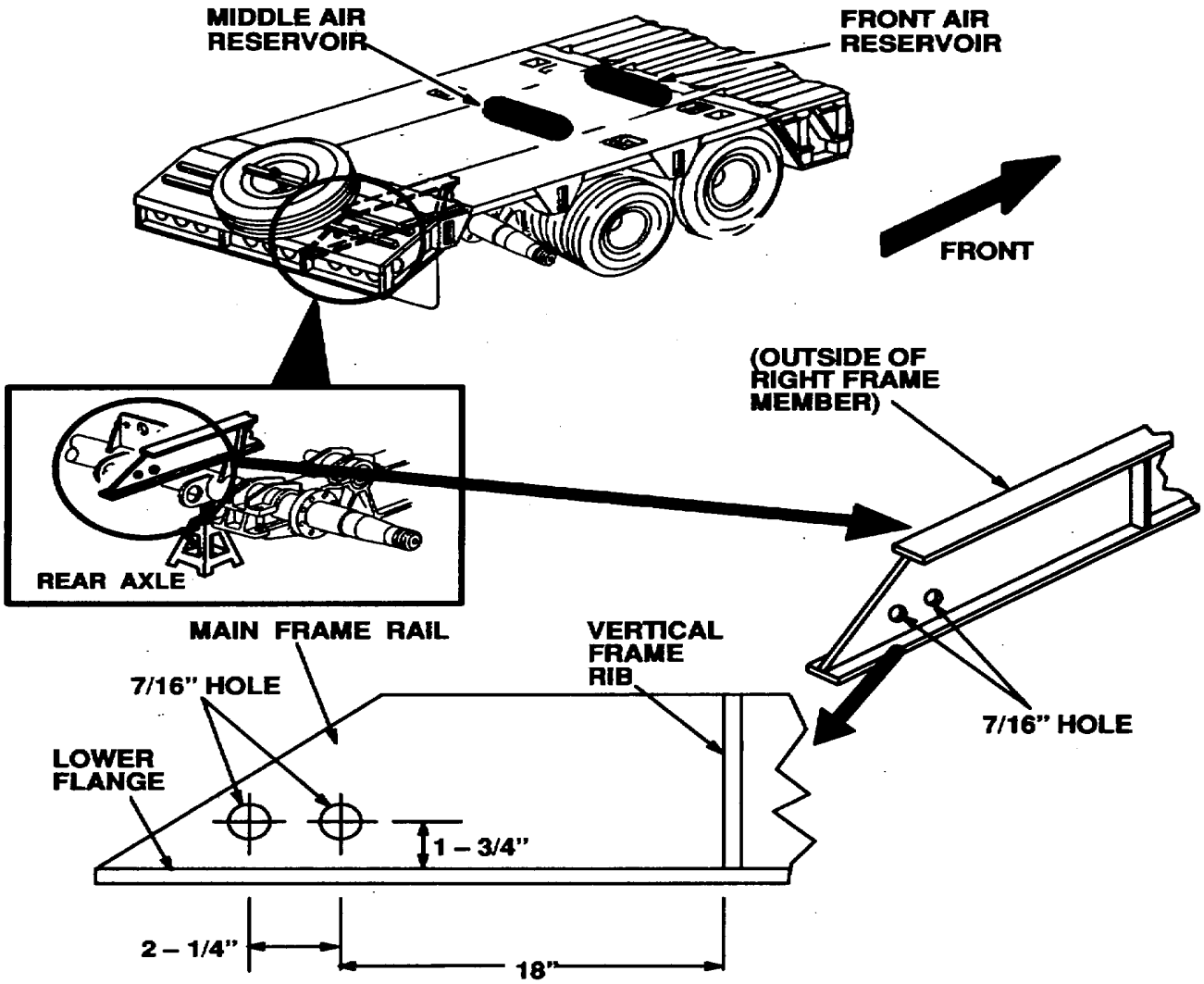

Figure 21.

b. Install Air Reservoir Mounting Brackets and New Air Reservoir Assembly.

Refer to Figure 21.

WARNING

To prevent Injury to eyes, wear safety goggles during all punching and drilling operations.

(1) Locate the first vertical frame rib on the outside of the main frame rail, above and rear of the trunnlon axle.

(2) From the vertical rib, measure 18 inches to the r ear and up 1-3/4 inches from the top of the main frame rail lower flange. Mark this location using suitable scribe and center punch.

(3) Repeat Step a(2) above for the main frame rail on the opposite side of the trailer.

(4) Drill a 3/16-inch pilot hole and enlarge to a 7/16-inch hole in the main frame rail at the four marked locations as shown. Have a helper apply lubrication during drilling.

10. INSTALLATION PROCEDURE M870A1 BRAKE MOD (BENDIX) (Continued).

Refer to Figure 22.

c. Install mounting brackets, PN 112472.

NOTE

If minor misallnement of new mounting bracket holes and frame holes occur, make adjustments by elongation of mounting bracket holes. Do not alter frame holes.

(1) Install two new mounting brackets (1), in the new holes on the inside of the main frame rails (2), with short side of brackets next to frame.

(2) Secure new mounting brackets (1) to main frame rails (2) using screws (3), PN 290964, flat washers (4), PN 204235, lockwashers (5), PN 202983, and locknuts (6), PN 298476.

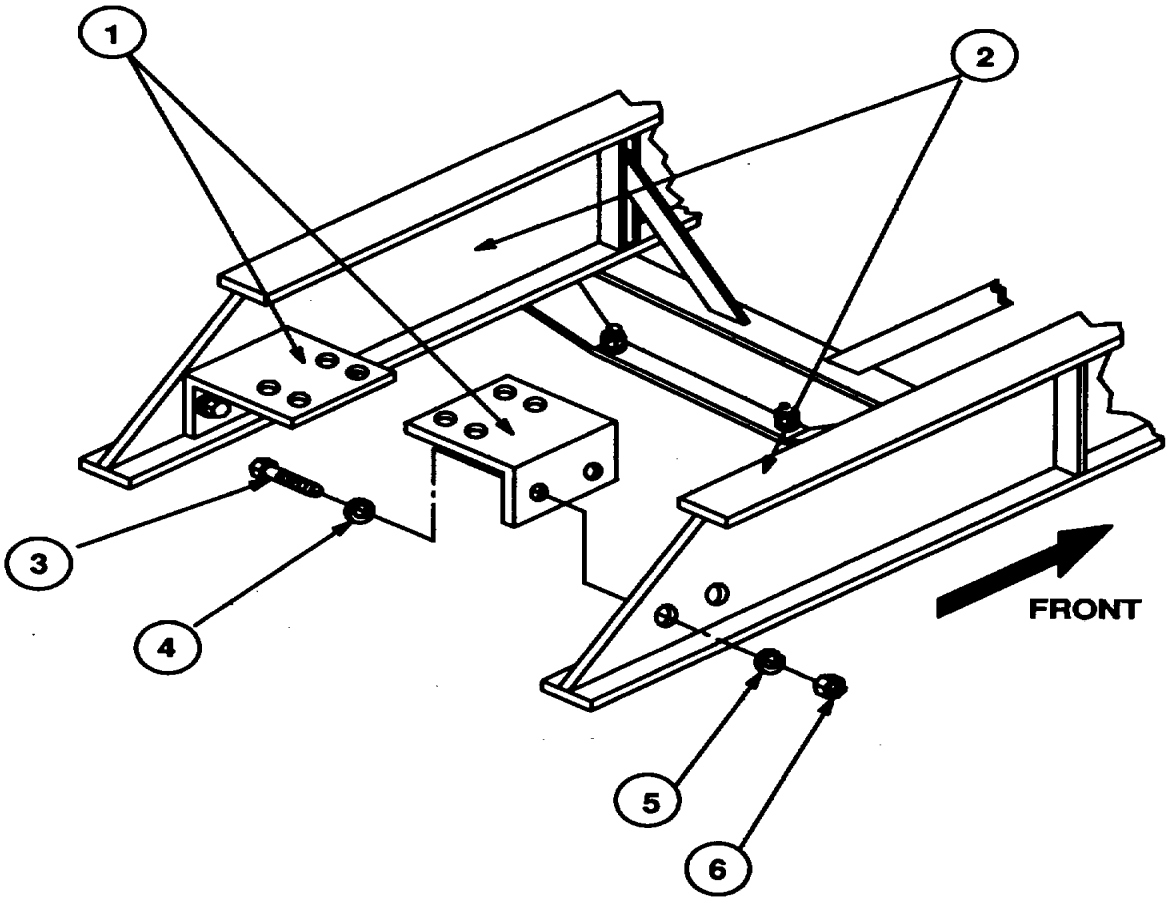

Figure 22.

10. INSTALLATION PROCEDURE M870A1 BRAKE MOD (BENDIX) (Continued).

d. Assemble New Relay Emergency Valve PN 106345, and Install Into Rear Air Reservoir Tank.

NOTE

Before Installing fittings into valve, or tank, wrap fitting threads with two turns of Antiseizing Tape MIL-T-27730

Refer to Figure 23.

(1) Install two pipe plugs (1), PN 238807 in front delivery ports of valve (2).

(2) Install 45-degree elbow (3), PN 220722, into top port of relay emergency valve (2), facing to right side of trailer.

(3) Install 45-degree elbow (4), PN 220722, into bottom port of relay emergency valve (2), facing to left side of trailer.

(4) Install relay emergency valve (2) into rear air reservoir tank (5) by screwing fitting (6), attached to valve 19 into tank (IK

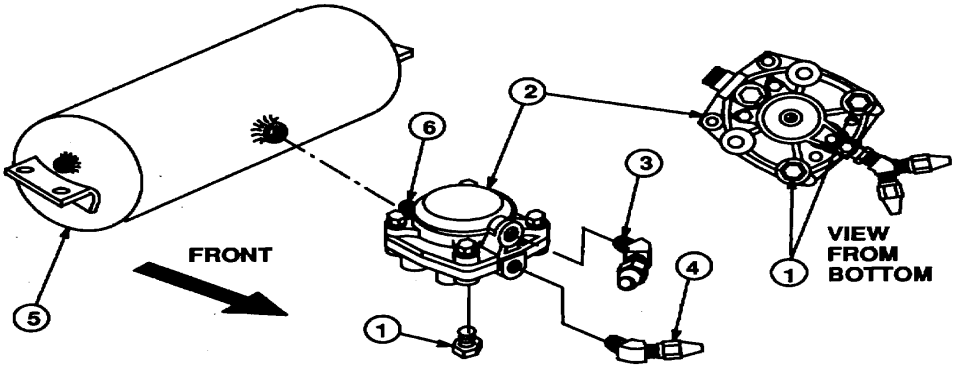

Figure 23.

e.. Install Tank Hardware

Refer to Figure 24.

(1) Install plug (1), PN 229226, into tank port (2) and plug (3), PN 238822, into tank port (4).

(2) Install drain cock (5) PN 103385, into bottom port (6) of tank (7).

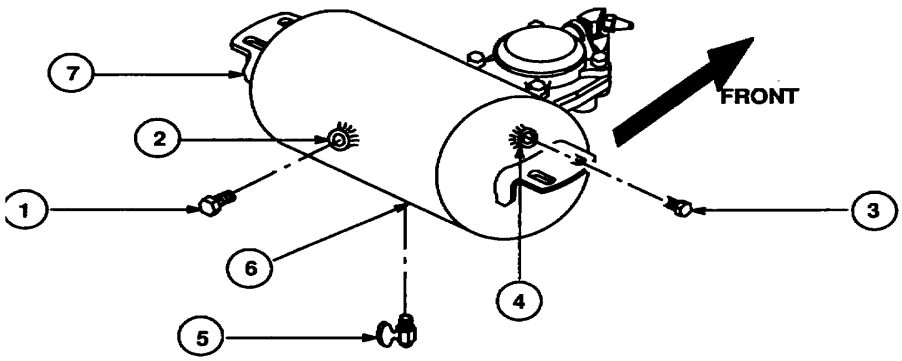

Figure 24.

10. INSTALLATION PROCEDURE M870A1 BRAKE MOD (BENDIX) (Continued).

f. Install New Air Reservoir Assembly Mounting Brackets.

Refer to Figure 25.

(1) Install new air reservoir assembly (1) to the bottom of mounting brackets (2) as shown.

(2) Make sure reservoir emergency relay valve is facing forward and secure. Secure reservoir (1) to brackets (2) with screws (3), PN 290964, flat washers (4), PN 204235, lock washers (5), PN 202983, and locknuts (6), PN 298476.

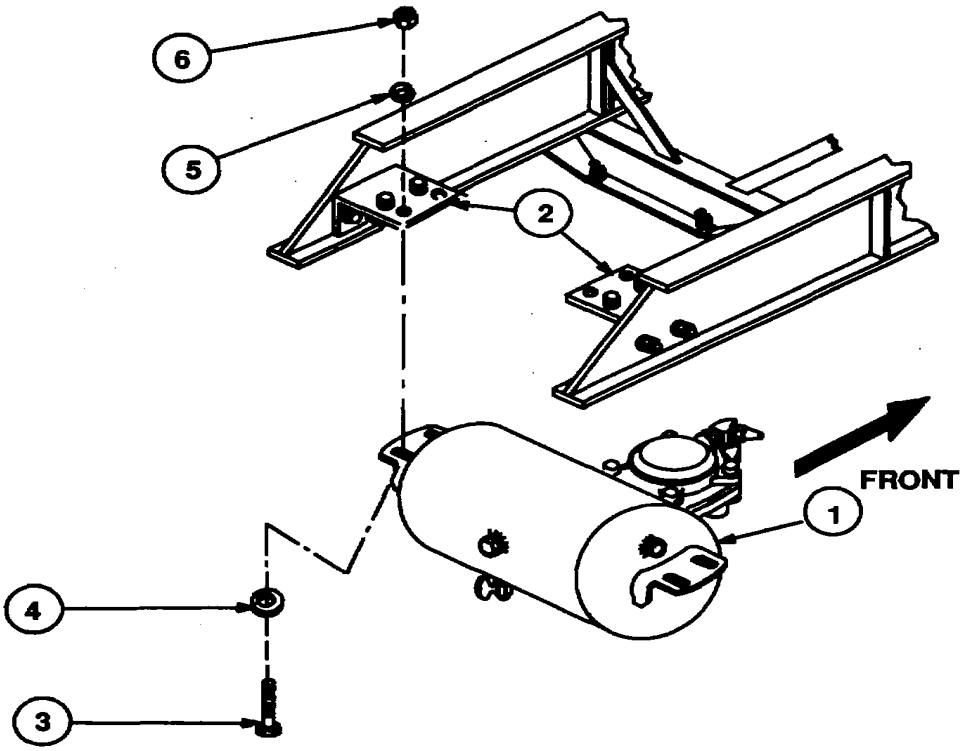

Figure 25.

g. Remove old Emergency Relay Valve..

Refer to Figure 26

NOTE

For Identification of air lines during Installation, tag and identify all air lines prior to removal using Marker Tag MIL-T-12755.

NOTE

To prevent damage to fitting ends, before removing fittings from valve or tanks, wrap fitting ends with Masking Tape, MIL-T-27730.

(1) Identify, tag, and disconnect all air lines from old emergency relay valve.

10. INSTALLATION PROCEDURE M870A1 BRAKE MOD (BENDIX) (Continued).

(2) Remove two screws (1), flat washers (2), and locknuts (3) from old emergency relay valve main frame bracket. Set aside screws and washers for reuse. Discard locknuts in accordance with paragraph 8d. (3) Remove emergency relay valve (9).

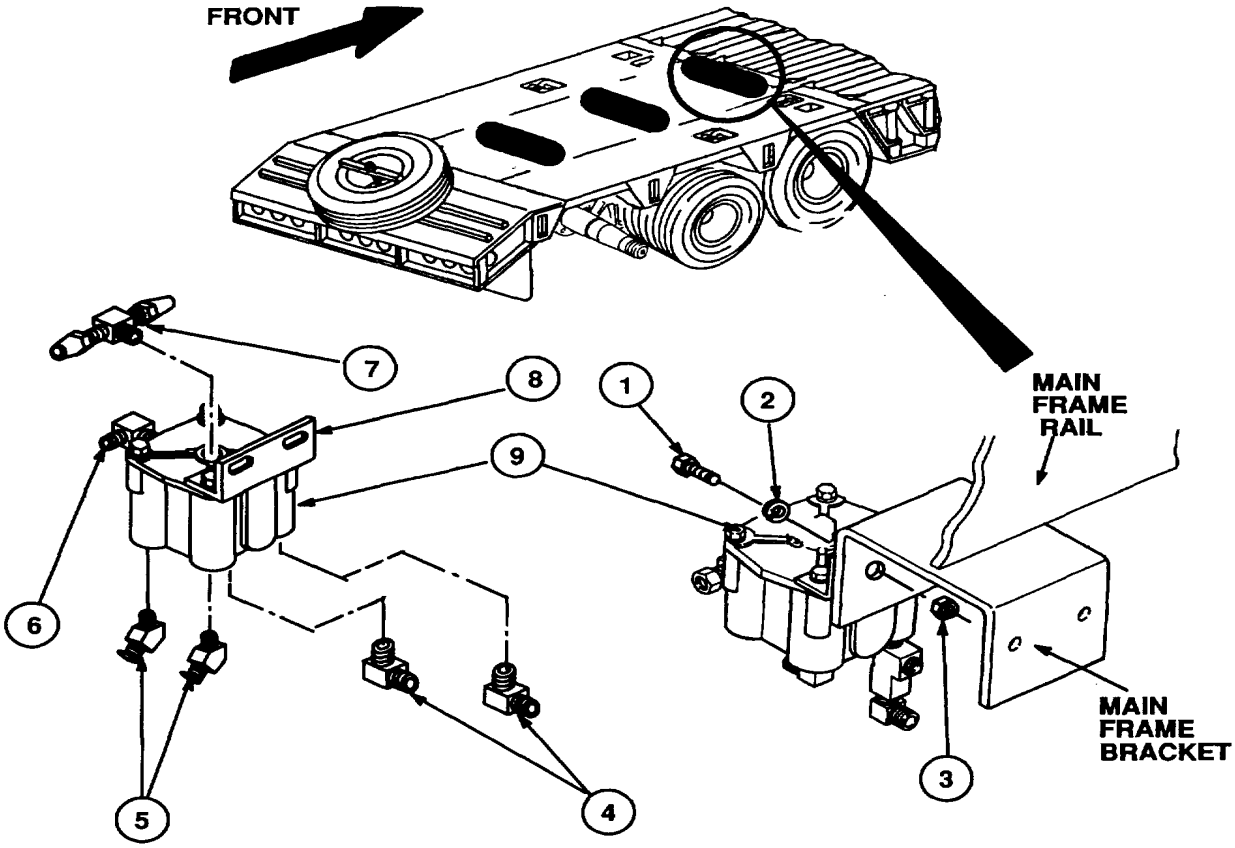

Figure 26.

(4) Remove two front delivery 45 degree elbows (5) with adapters, two rear delivery elbows (4) with adapters, and supply port elbow (6), from emergency relay valve (9). Set elbows (4 and 5) for use in new relay valve, and supply port elbow (6) aside for reuse in spring brake valve large cross fitting.

(5) Remove all remaining fittings from valve (9). Clean and inspect fittings and dispose of in accordance with paragraph 8d.

h. Install New Emergency Relay Valve PN104561.

NOTE

To prevent mixup between valves, before installing new emergency relay valve, check part number of valve. Both emergency relay valves look identical but have different internal components.

(1) Obtain new emergency relay valve.

10. INSTALLATION PROCEDURE M870A1 BRAKE MOD (BENDIX) (Continued).

h. Install New Emergency Relay Valve PN104561 (Continued).

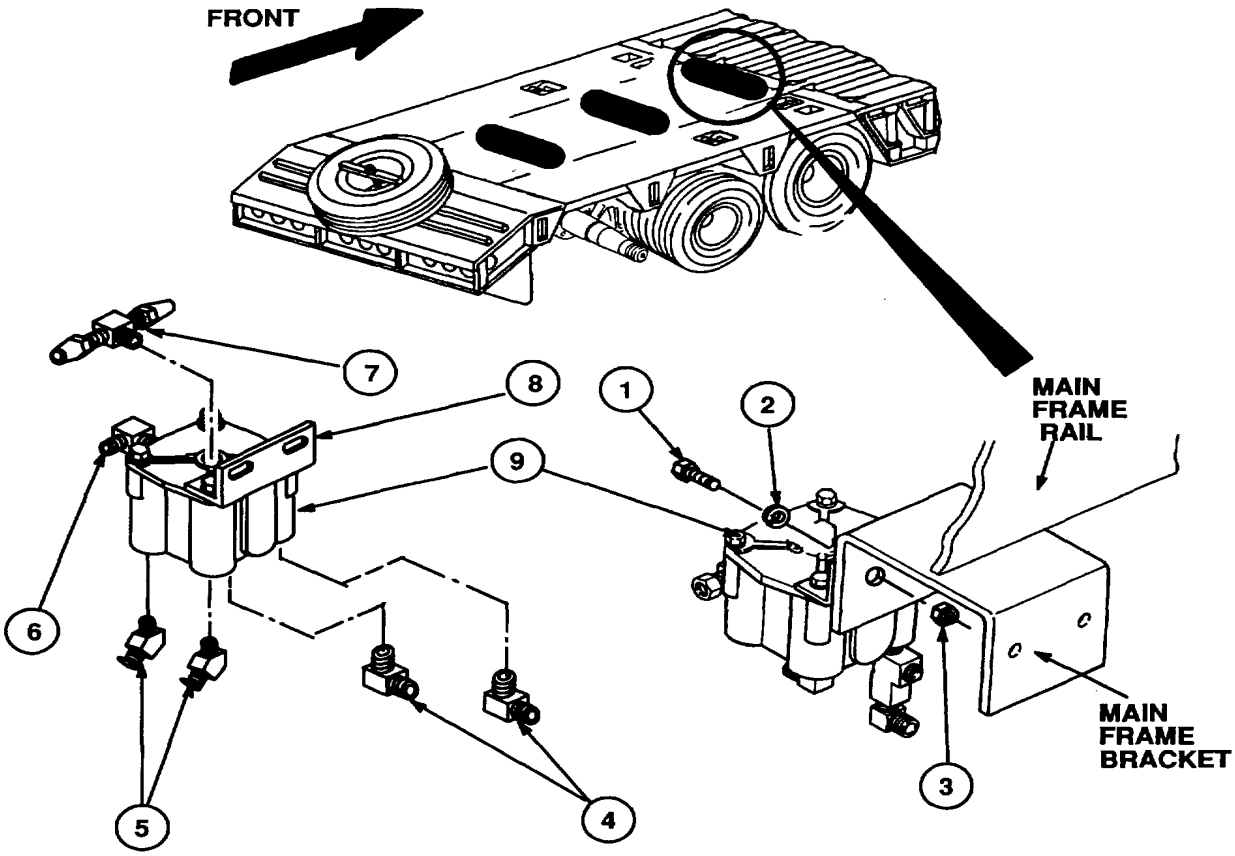

Figure 27.

(2) Refer to Figure 27.

NOTE

The new emergency relay valve comes with a new bracket supplied. The bracket will not be needed for this installation. Dispose of bracket as described in paragraph 8d.

(3) Install rear service delivery elbow with adapters (4), in the new relay valve (9) rear service delivery ports.

(4) Install front delivery 45 degree elbows (5), with adapters in the new relay valve (9), front service delivery ports, externally threaded end facing forward when mounted.

(5) Install frame mounting bracket (8) on the new relay valve (9).

(6) Install new supply port elbow (6), PN 221825, on new relay valve (9).

(7) Install tee (7), PN 205103 on new relay valve (9) as shown.

(8) Secure the new relay valve (9) to the frame bracket with two screws (1), flat washers (2), and new locknuts (3), PN M351922-9.

10. INSTALLATION PROCEDURE M870A1 BRAKE MOD (BENDIX) (Continued).

i. Connect Air Chamber Service Hoses and Air Lines.

Refer to Figure 28

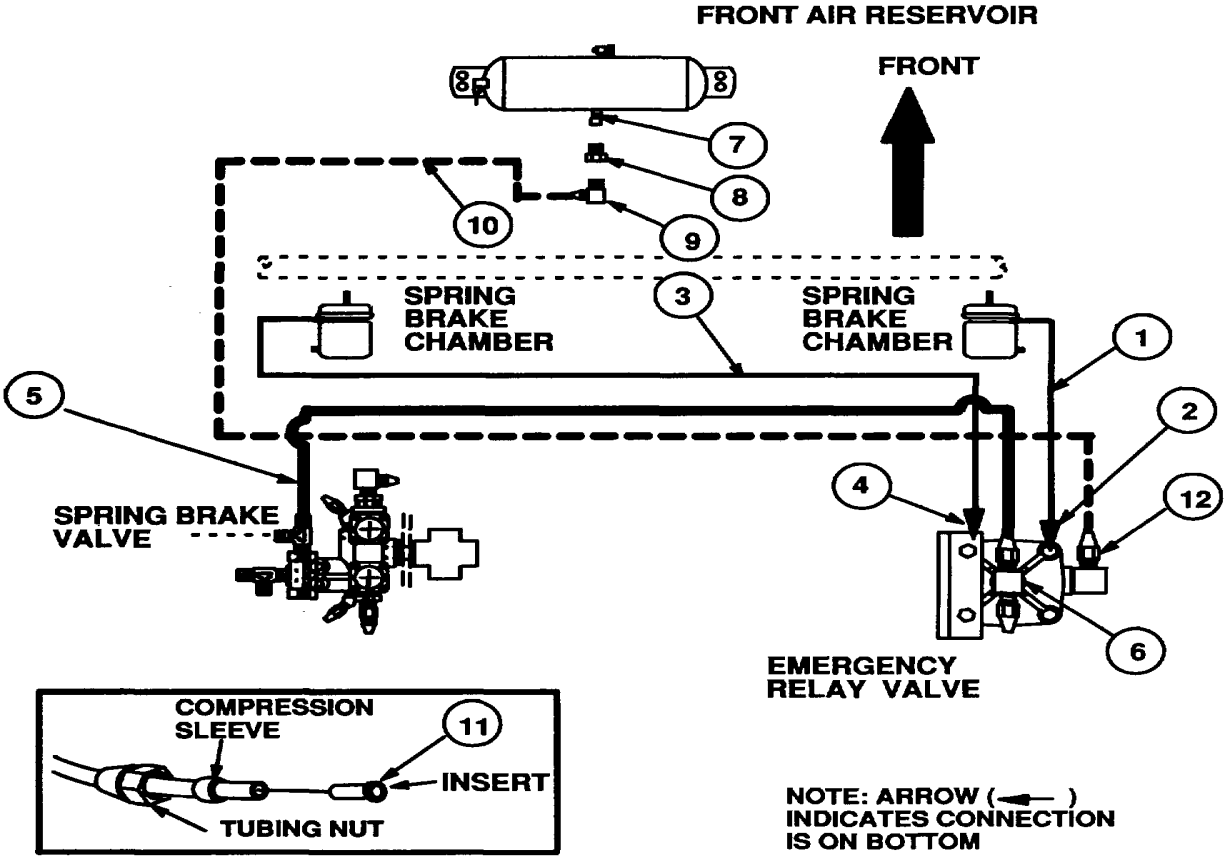

Figure 28.

(1) Connect the front axle right air chamber service air hose (1). to the new relay valve right front delivery 45 degree elbow (2) adapter.

(2) Connect the front axle left air chamber service air hose (3), to the new relay valve left front delivery 45 degree elbow (4) adapter.

(3) Connect the service air line (5) from the spring brake valve (3/8" tube), to the new relay valve tee (6), front connection.

(4) Remove front air reservoir tank center plug at location (7). Dispose of plug as described in paragraph 8d..

(5) install reducing bushing (8), PN 234680. and elbow (9), PN 221825, in the front air reservoir center port at location (7), facing the left (eight o'clock) position.

(6) Install new air line (10), PN 112473 (5/8" x 110" tube), and inserts (11), PN 247608, from the front air reservoir tank elbow at location (7), rearward (through the left main frame crossmember opening), to the new relay valve elbow (12).

10. INSTALLATION PROCEDURE M870A1 BRAKE MOD (BENDIX) (Continued).

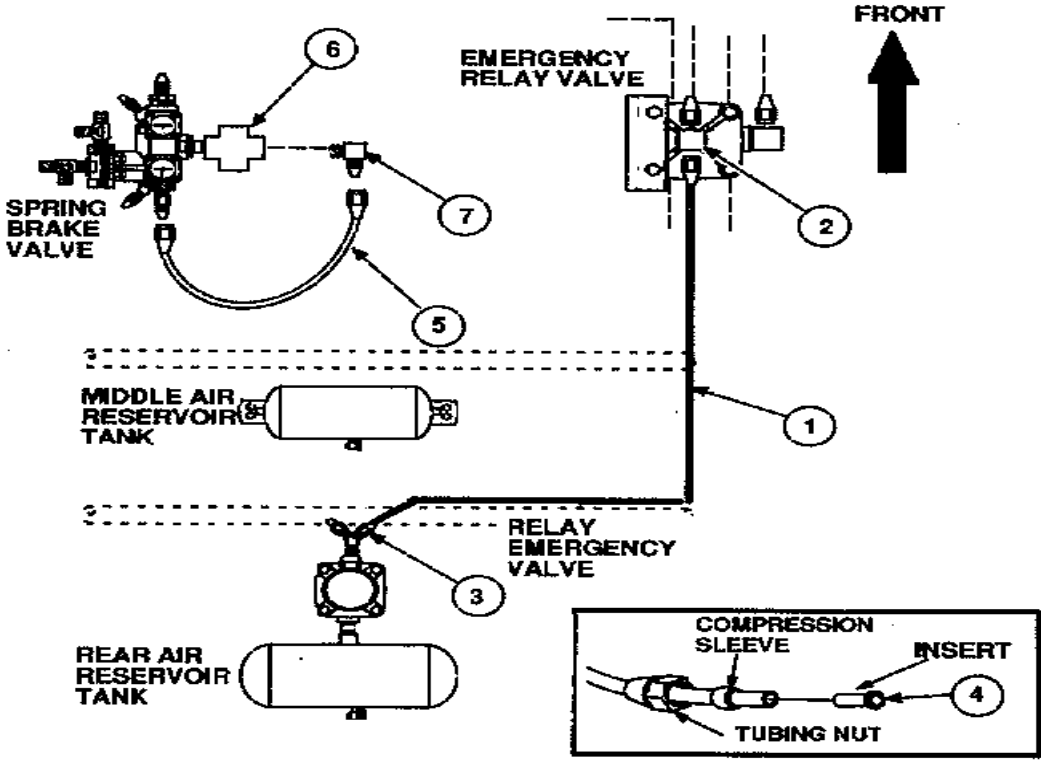

Figure 29.

Refer to Figure 29.

(1) Refer to TM 5-2330-378-14&P. Remove the rear axle brake chamber air hoses. Dispose of hoses in accordance with paragraph 8d. Turn elbows rearward.

(2) Run a new service line (3/8" tube) (1) from the relay valve top tee (2), rear connection, rearward along the right main frame rail through the support brackets. Proceed to the rear air reservoir tank relay emergency valve upper 45 degree elbow (3).

(3) Remove tubing nut and sleeve from the relay valve top tee (2), rear connection. Install tubing nut, sleeve, and tubing insert (4), PN246089, on the relay valve end of the new service air line (3/8"tube) (1). Connect new service air line to the relay valve, top tee (2), rear connection.

(4) Recheck routing and length of the new service air line (1) to the rear air reservoir tank relay emergency valve. Mark the length and cut the new service air line at the relay emergency valve location.

(5) Remove tubing nut and sleeve from the relay emergency valve, upper 45 degree elbow (3). install tubing nut, sleeve. and tubing insert, PN 246089, on the relay emergency valve end of the new service air line (3/8" tube). Connect new 3/8" service air line (1) to the relay emergency valve, upper 45 degree elbow (3).

(6) Disconnect the short air line 3/8" tube(5) on the large cross fitting (6), right side. Remove elbow (7). Dispose of elbow as described in paragraph 8d..

(7) Install elbow (removed from relay valve, 1/2-inch pipe to 1/2-inch tube) in the large cross fitting (6) right side, facing forward.

10. INSTALLATION PROCEDURE M870A1 BRAKE MOD (BENDIX) (Continued).

J. Install New Spring Brake Emergency and Service Air Tubing

Refer to Figure 30.

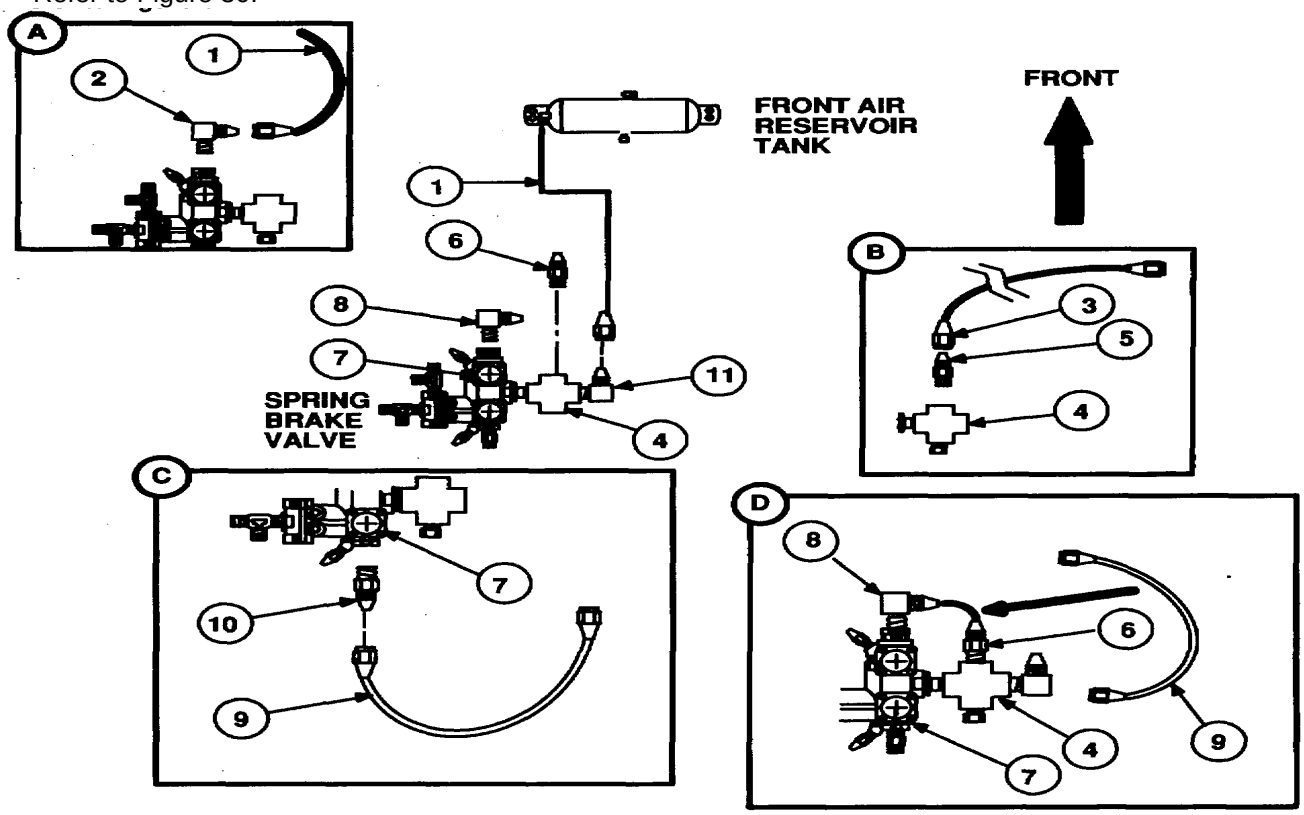

Figure 30.

(1) (See View A). Disconnect the front air reservoir tank air line, 1/2" tube (1) from the spring brake valve front port elbow (2). Remove elbow. Dispose of elbow as described in paragraph 8d.

(2) (See View B). Remove the airline 1/2" tube (3) from the large cross fitting (4) front port straight adapter (5). Dispose of tube as described in paragraph 8d.

(3) (See View B). Remove the straight adapter (5), from the large cross fitting (4) front port. Dispose of straight adapter as described in paragraph 8d.

(4) (Main View). Install new straight adapter(6), PN 222063. in the large cross fitting (4), front port.

(5) (Main View). Install elbow (8), PN 205102, in the spring brake valve (7) right front port, facing right.

(6) (See View C). Remove the short air line, 3/8" tube (9), from the spring brake valve (7) rear port. Set short air line aside for reuse.

(7) (See View C). Remove the straight adapter (10), from the spring brake valve (7) rear port. Dispose of straight adapter as describe in paragraph 8d.

(8) (See View D). Reinstall the short air line 3/8" tube (9), removed in paragraph 6 above, from the spring brake valve (7) front port to the large cross fitting (4) front port.

(9) (Main View). Connect the front air reservoir tank air linel/2" tube (1) to the large cross fitting (4) right side elbow (11).

10. INSTALLATION PROCEDURE M870A1 BRAKE MOD (BENDIX) (Continued).

k. Install Middle Air Reservoir Airlines and Fittings.

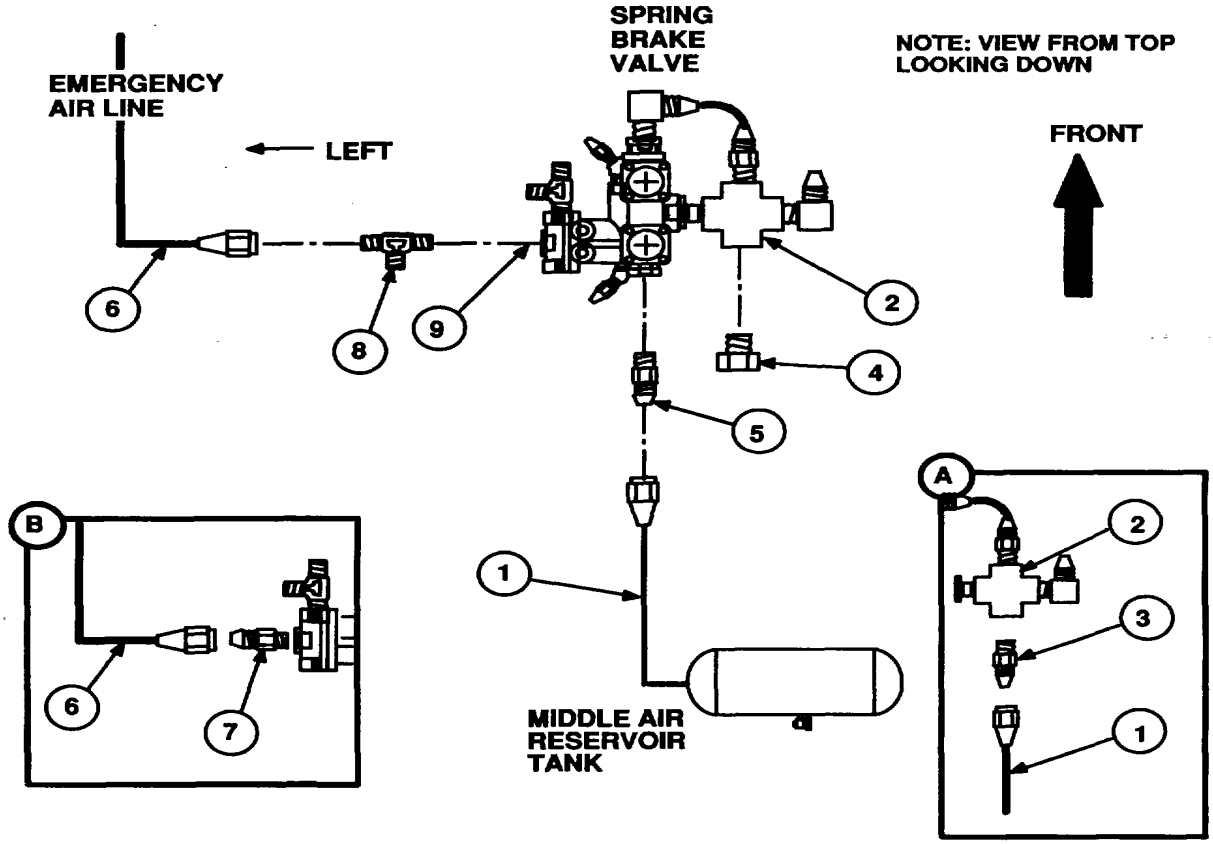

Figure 31.

Refer to Figure 31.

(1) (See View A). Disconnect the middle air reservoir tank air line 1/2" tube (1) at the large cross fitting (2) rear port, and remove straight adapter (3). Dispose of straight adapter as described in paragraph 8d.

(2) Install plug (4), PN 238822, in the large cross fitting (2) rear port. Install straight adapter(5), PN 217690, in the spring brake valve rear port.

(3) Connect the middle air reservoir tank linel/2" tube (1) to the spring brake valve rear straight adapter (5).

(4) (See View B). Disconnect the emergency air line, 3/8" tube (6) at the spring brake valve left port, and remove the spring brake valve left port straight adapter (7). Dispose of adapter as described in paragraph 8d.

(5) Install tee (8), PN 205104, in the spring brake valve, left port (9) with one connection facing left and one connection facing rearward. Connect the emergency air line, 3/8" tube (6), to the spring brake valve, left tee (8), left connection.

I1. INSTALLATION PROCEDURE M870A1 BRAKE MOD (BENDIX) (Continued).

l. Install Middle Axle Air Lines.

Refer to Figure 32

(1) Connect the middle axle right air chamber service air hose (1), to the new relay valve left rear delivery elbow (2) adapter.

(2) Connect the middle axle left air chamber service air hose (3), to the new relay valve right rear, delivery port elbow (4) adapter.

m. Install Rear Air Reservoir Emergency Air Lines and Fittings.

Refer to Figure 32

(1) Run a new emergency air line (3/8" tube) (5) from the spring brake valve left tee (6), rear connection, rearward along the left main frame rail through support brackets. Proceed to the rear air reservoir tank relay emergency valve (7) lower 45 degree elbow.

(2) Remove tubing nut and sleeve from the spring brake valve, left tee (6), rear connection. Install tubing

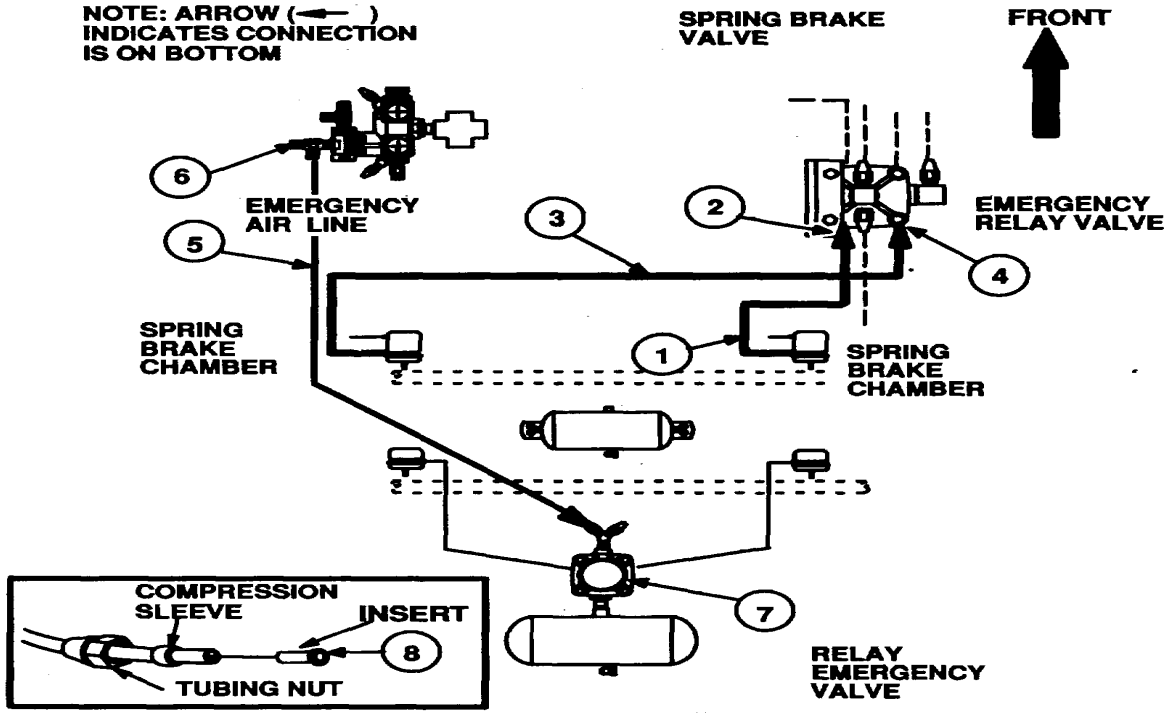

Figure 32.

(3) Recheck routing and length of the new emergency air line (5) to the rear air reservoir tank relay emergency valve (7). Mark the length and cut the new emergency air line at the relay emergency valve location.

(4) Remove tubing nut and sleeve from the relay emergency valve (7) left lower 45 degree elbow. Install tubing nut sleeve, and tubing insert (8), PN 246089, on the relay emergency valve (7) end of the new emergency air line (3/8" tube) (5). Connect new emergency air line (5) to the relay emergency valve (7), lower 45 degree elbow.

10. INSTALLATION PROCEDURE M870A1 BRAKE MOD (BENDIX) (Continued).

n. Install Service Brake Chamber to Rear Air Reservoir Hoses.

Refer To Figure 33.

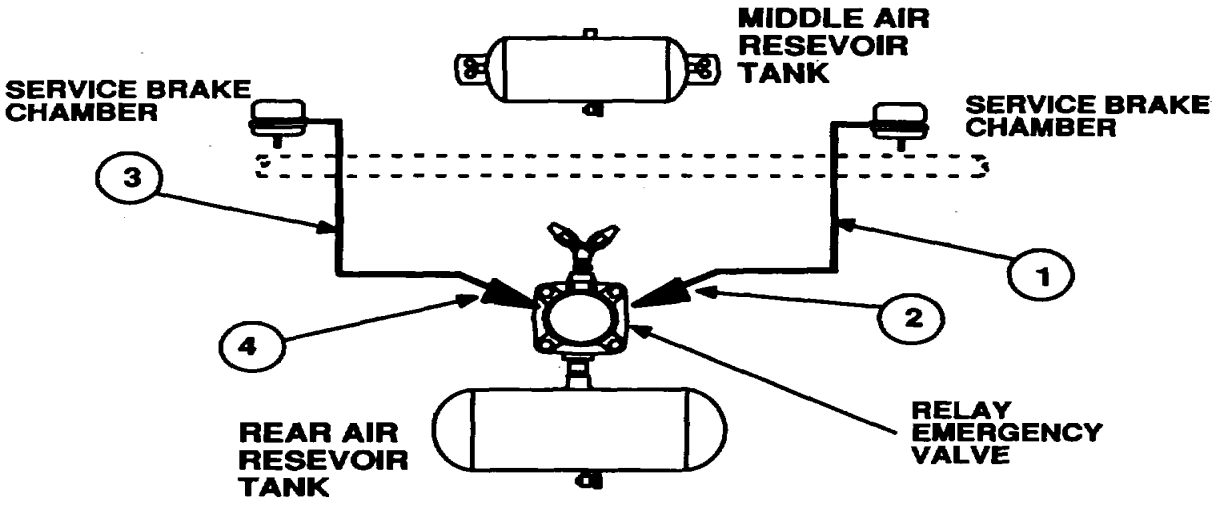

Figure 33.

(1) Install new air hose with adapter, PN 109165, (1), from the rear axle right air chamber elbow, to the rear air reservoir relay emergency valve right delivery port (2).

(2) Install new air hose with adapter, PN 109165,(3), from the rear axle left air chamber to the rear air reservoir tank relay emergency valve left delivery port (4).

10. MODIFICATION PROCEDURE FOR M870A1 BRAKE (BENDIX) (Continued).

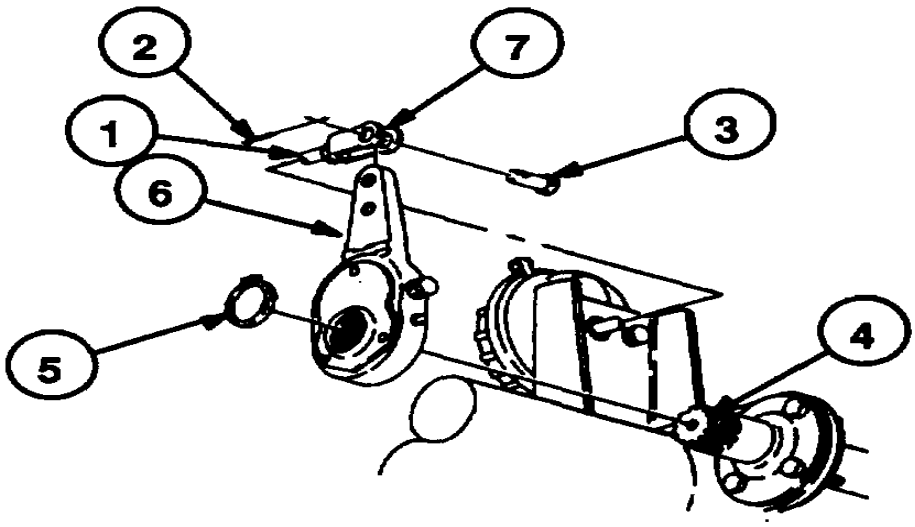

Figure 34.

o. Replace Slack Adjusters. Refer to TM 5-2330-378-14&P.

NOTE

Release brakes. Cage if necessary.

CAUTION

When using hammer to tap off slack adjuster, try not to strike "S" cam shaft-to-axle mounting bracket. If bracket is struck during slack adjuster removal, inspect base of bracket for cracks. If required straighten bracket and repair cracks by welding.

(1) Refer to Figure 34.
(a) Loosen clevis jam nut (1).
(b) Remove cotter pin (2), clevis pin (3), retainer ring (5), and slack adjuster (6) from camshaft (4). Clean and dispose of cotter pin, clevis pin, and slack adjuster as described in paragraph 8d. Clean and set aside retaining ring for reuse.

(c) Remove the brake chamber clevis rod end (7) and dispose of in accordance with paragraph 8d.

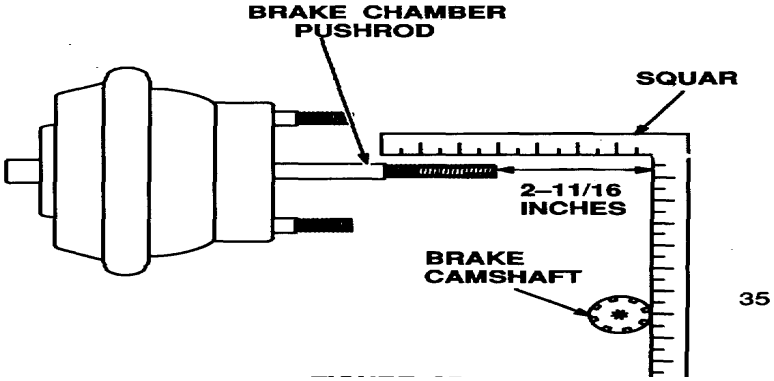

Figure 35.

10. MODIFICATION PROCEDURE FOR M870A1 **BRAKE (BENDIX) (Continued).**

(2) Check brake chamber push rod for proper length as follows:

Refer to Figure 35.

(a) With the brake chamber in the released position (cage if necessary), place a square (or equivalent object) so that one edge is parallel with the brake chamber push rod and the other edge Is against the camshaft.

(b) Measure the gap from the end of the brake chamber push rod to the vertical edge of the square.

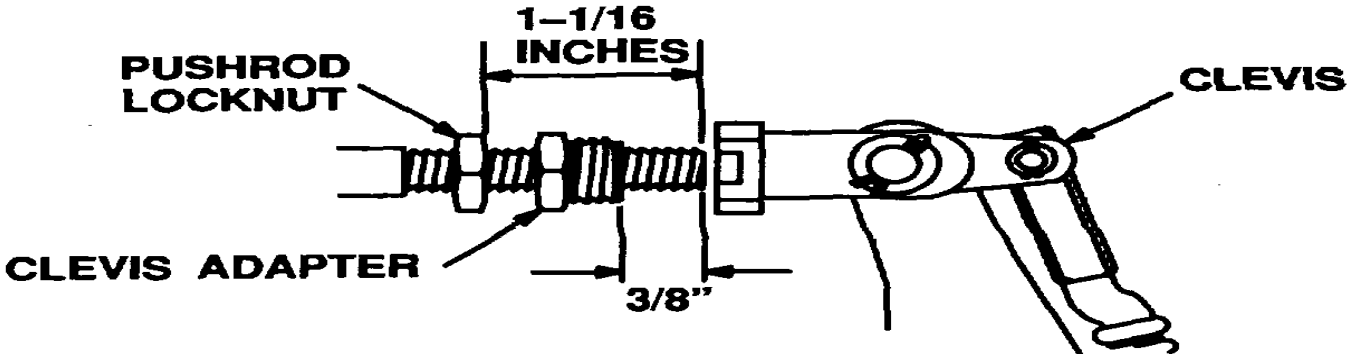

Figure 36.

Refer to Figure 36.

(d) Position the brake chamber push rod locknut approximately 1-5/16 inches from the threaded end. Thread the clevis adapter on the push rod to about 3/8-inches from threaded end.

(e) Install Automatic Slack Adjuster-5 (ASA-5) on the brake camshaft. Reuse retaining ring set aside during slack adjuster removal.

Refer to Figure 37.

(f) Turn ASA-5 adjustment hex clockwise until clevis adapter extends into threaded bore of clevis approximately 1/8-inch. Thread adapter into clevis and tighten snug.

(g) Place square or other suitable straight edge so that one edge of square is parallel with brake chamber push rod and the other edge is against the outer edge of the camshaft.

(h) Measure the gap measurement between the outside of camshaft and the center of clevis pin. The distance shall be not less than 1-1/2-inches, nor more than 2-3/4-inches.

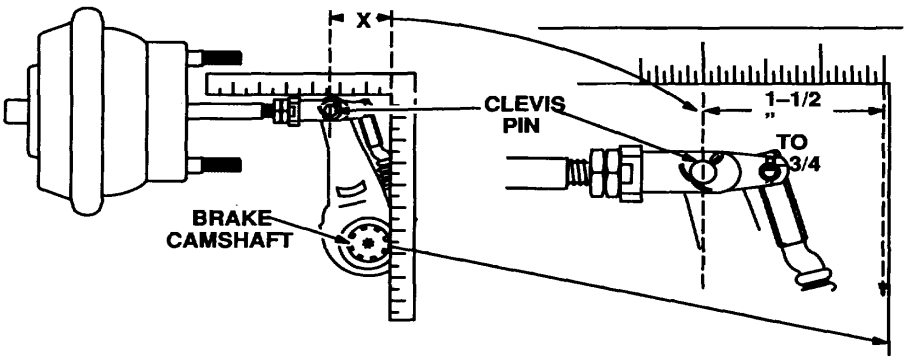

Figure 37.

10. MODIFICATION PROCEDURE FOR M870A1 BRAKE (BENDIX) (Continued).

10.

(3) Manually adjust brakes as follows:

(a) Rotate adjustment hex clockwise until brake linings are snug against the brake drum.

(b) Turn adjustment hex counter-clockwise 1/4-turn. (Approximately 70 pound-feet of effort is required to over-ride automatic adjusting mechanism.)

(c) Refer to Figure 37. Pull brake chamber push rod to confirm that approximately 1/2-inch of free stroke exist.

(4) Uncage spring brakes (if necessary).

(a) Apply 90 to 95 psi air pressure from towing vehicle air gage. Make and hold full brake application to check that brake chamber push rod stroke is below the re-adjustment limit of 2 inches.

b Repeat steps 1 0.s.(2).(d). through 1 0.s.(4). as necessary, threading adapter an additional 6-inch each time, to bring brakes in to proper adjustment,.

p. Serviceability Testing (Leakage Test).

(1) Test and check brakes for serviceability as follows:

(a) Connect air brake system to towing vehicle (Refer to TM5-2330-378-14&P).
(b) Coat all drain cocks, pipe plugs and air line connections, affected by this modification, with soapsuds.
(c) Check all drain cocks, pipe plugs and connections for leakage. No leakage is permitted.
(d) Tighten all leaking connections as required and perform serviceability testing until no sign of leakage occurs.

(2) Correct any problems found during above tests, then retest as needed.

q. Reinstall Tires and Remove Jackstands. Refer to TM 5-2330-378-14&P.
r. Update Vehicle Data Plate as described in paragraph 14c.

END OF TASK.

11. CALIBRATION. Not applicable.

12. WEIGHT AND BALANCE. Calculated for one trailer. Data plate is applicable to all trailer with this modification.

13. QUALITY ASSURANCE. QA is assured with final inspection. This MWO defines tests, proven parts, and specific installation directions to convert an M870 or M870A1.

14. RECORDING AND REPORTING OF THE MODIFICATION.

(a) Modification of this equipment shall be reported as referenced by AR 750-10, PA Pamphlet 738-751 and TB 9-1100-803-15. Application and disposition of the vehicle inspection forms are DA Forms 2408-5, 2408-9, 2409, and 2407.

(b) Equipment marking is provided by revising the data plate affixed to the side of the gooseneck. t

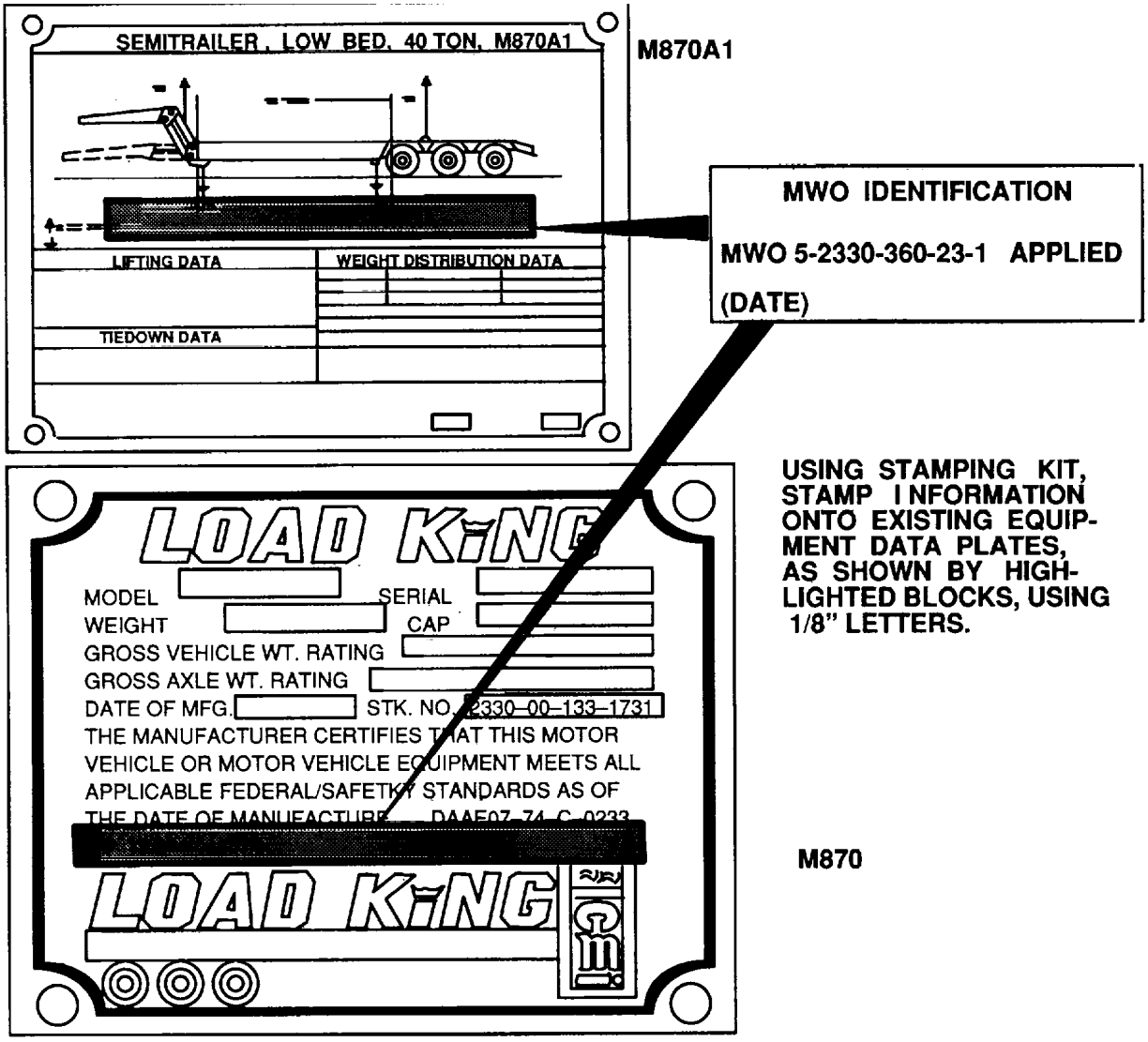

EQUIPMENT DATA PLATES

15. MATERIEL CHANGE NUMBER: 1-93-06-4440

16. MODIFICATION IDENTIFICATION. 5-2330-360-23-1

APPENDIX A

TORQUE LIMITS

CAPSCREW MARKINGS

Current Usage	Much Used	Much Used	Used at Times	Used at Times
Quality of Material	Intermediate	Minimum Commercial	Medium Commercial	Best Commercial
SAE Grade Number	1 or 2	5	6 or 7	8
Capscrew Head Markings	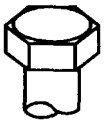			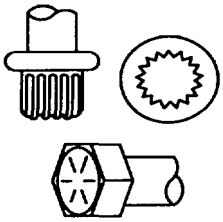
Manufacturer's marks may vary.				
These are all SAE Grade 5 (3 line)				

TORQUE VALUES

CAUTION

If replacement capscrews are of a higher grade than originally supplied, use torque specifications for that placement. This will prevent equipment damage due to over torquing.

Capscrew Body Size (Inches)	- (Thread)	Torque Ft Lb (N-m)		Torque Ft Lb (N-m)		Torque Ft Lb (N-m)		Torque Ft Lb (N-m)	
¼	20	5	(7)	8	(11)	10	(14)	12	(16)
	28	6	(8)	10	(14)			14	(19)
5/16	18	11	(15)	17	(23)	19	(26)	24	(33)
	24	13	(18)	19	(26)			27	(37)
3/8	16	18	(24)	31	(42)	34	(46)	44	(60)
	24	20	(27)	35	(47)			49	(66)
7/16	14	28	(38)	49	(66)	55	(75)	70	(95)
	20	30	(41)	55	(75)			78	(106)
1/2	13	39	(53)	75	(102)	85	`(115)	105	(142)
	20	41	(56)	85	(115)			120	(163)
9/16	12	51	(69)	110	(149)	120	(163)	155	(210)
	18	55	(75)	120	(163)			170	(231)
5/8	11	83	(113)	150	(203)	167	(226)	210	(285)
	18	95	(129)	170	(231)			240	(325)
¾	10	105	(142)	270	(366)	280	(380)	375	(508)
	16	115	(156)	295	(400)			420	(569)
7/8	9	160	(217)	395	(536)	440	(597)	605	(820)
	14	175	(237)	435	(590)			675	(915)
1	8	235	(319)	590	(800)	660	(895)	910	(1234)
	14	250	(339)	660	(895)			990	(1342)

APPENDIX A (Continued)

TORQUE VALUES - Continued

NOTE

Always us the torque values listed above when specific torque values are not available.

Do not use above values in place of those specified in other sections of this manual; special attention should be observed when using SAE Grade 6, 7, and 8 capscrews.

'The above is based on the use of clean, dry threads.

• Reduce torque by 10 percent when engine oil is used as a lubricant.

• Reduce torque by 20 percent if new, plated capscrews are used.

• Capscrews threaded into aluminum may require reductions in torque of 30 percent or more of Grade 5 capscrews torque and must attain two capscrew diameters of thread engagement.

By Order of the Secretary of the Army:

GORDON R. SULLIVAN
General, United States Army
Chief of Staff

Official:

MILTON H. HAMILTON
Administrative Assistant to the
Secretary of the Army
06084

Distribution:
To be distributed IAW DA Form 12-39-E (Block No. 1005) requirements for TM 5-2330-360-14&P, and TM 5-2330-378-14&P.

☆U..S. GOVEIRNMENT PRINTING OFFICE:1994-546-017/00031

TEAR ALONG PERFORATED LINE

RECOMMENDED CHANGES TO EQUIPMENT TECHNICAL PUBLICATIONS

THEN. . JOT DOWN THE DOPE ABOUT IT ON THIS FORM, CAREFULLY TEAR IT OUT, FOLD IT AND DROP IT IN THE MAIL!

SOMETHING WRONG WITH THIS PUBLICATION?

FROM: (PRINT YOUR UNIT'S COMPLETE ADDRESS)

DATE SENT

PUBLICATION NUMBER	PUBLICATION DATE	PUBLICATION TITLE

BE EXACT. . .PIN-POINT WHERE IT IS

PAGE NO.	PARA-GRAPH	FIGURE NO	TABLE NO.	IN THIS SPACE TELL WHAT IS WRONG AND WHAT SHOULD BE DONE ABOUT IT:

PRINTED NAME, GRADE OR TITLE, AND TELEPHONE NUMBER	SIGN HERE:

DA FORM 1 JUL 79 2028-2

PREVIOUS EDITIONS ARE OBSOLETE.

P.S.—IF YOUR OUTFIT WANTS TO KNOW ABOUT YOUR RECOMMENDATION MAKE A CARBON COPY OF THIS AND GIVE IT TO YOUR HEADQUARTERS.